Mazda6 Bodyshop Manual

FOREWORD

This bodyshop manual is intended for use by technicians of Authorized Mazda Dealers to help them service and repair Mazda vehicles. It can also be useful to owners and operators of Mazda vehicles in performing limited repair and maintenance on Mazda vehicles.

For proper repair and maintenance, a thorough familiarization with this manual is important, and it should always be kept in a handy place for quick and easy reference.
All the contents of this manual, including drawings and specifications, are the latest available at the time of printing.
As modifications affecting repair or miantenance occur, relevant information supplementary to this volume will be made available at Mazda dealers. This manual should be kept up-to-date.

Mazda Motor Corporation reserves the right to alter the specifications and contents of this manual without obligation or advance notice.
All rights reserved. No part of this book may be reproduced or used in any form or by any means, electronic or mechanical including photocopying and recording and the use of any kind of information storage and retrieval system-without permission in writing.

Mazda Motor Corporation
HIROSHIMA, JAPAN

APPLICATION:
This manual is applicable to vehicles beginning with the Vehicle Identification Numbers (VIN) shown on the following page.

CONTENTS

Title	Section
GENERAL INFORMATION	I
CONSTRUCTION	II
PANEL REPLACEMENT	III
WATER-PROOF AND RUST PREVENTIVE TREATMENT	IV
DIMENSIONS	V
PLASTIC BODY PARTS	VI
PRIMARY COLOR MIXTURE CHART FOR BODY COLORS	VII

© 2002 Mazda Motor Corporation
PRINTED IN THE NETHERLANDS, March 2002
3360–1E–02C

VEHICLE IDENTIFICATION NUMBERS (VIN)

European (L.H.D.) specs.

JMZ	GG1232*#	100001—	JMZ	GG1432*#	100001—
JMZ	GG1282*#	100001—	JMZ	GG1482*#	100001—
JMZ	GG12F2*#	100001—	JMZ	GG14F2*#	100001—
JMZ	GG12F5*#	100001—	JMZ	GG14F5*#	100001—

U.K. specs.

JMZ	GG12820#	100001—	JMZ	GG14820#	100001—
JMZ	GG12F20#	100001—	JMZ	GG14F20#	100001—
JMZ	GG12F50#	100001—	JMZ	GG14F50#	100001—
JMZ	GG14320#	100001—			

GCC specs.

JM7	GG32F**#	100001—	JM7	GG34F**#	100001—
JM7	GG42F**#	100001—	JM7	GG44F**#	100001—

WARNING

Servicing a vehicle can be dangerous. If you have not received service-related training, the risks of injury, property damage, and failure of servicing increase. The recommended servicing procedures for the vehicle in this workshop manual were developed with Mazda-trained technicians in mind. This manual may be useful to non-Mazda trained technicians, but a technician with our service-related training and experience will be at less risk when performing service operations. However, all users of this manual are expected to at least know general safety procedures.

This manual contains "Warnings" and "Cautions" applicable to risks not normally encountered in a general technician's experience. They should be followed to reduce the risk of injury and the risk that improper service or repair may damage the vehicle or render it unsafe. It is also important to understand that the "Warnings" and "Cautions" are not exhaustive. It is impossible to warn of all the hazardous consequences that might result from failure to follow the procedures.

The procedures recommended and described in this manual are effective methods of performing service and repair. Some require tools specifically designed for a specific purpose. Persons using procedures and tools which are not recommended by Mazda Motor Corporation must satisfy themselves thoroughly that neither personal safety nor safety of the vehicle will be jeopardized.

The contents of this manual, including drawings and specifications, are the latest available at the time of printing, and Mazda Motor Corporation reserves the right to change the vehicle designs and alter the contents of this manual without notice and without incurring obligation.

Parts should be replaced with genuine Mazda replacement parts or with parts which match the quality of genuine Mazda replacement parts. Persons using replacement parts of lesser quality than that of genuine Mazda replacement parts must satisfy themselves thoroughly that neither personal safety nor safety of the vehicle will be jeopardized.

Mazda Motor Corporation is not responsible for any problems which may arise from the use of this manual. The cause of such problems includes but is not limited to insufficient service-related training, use of improper tools, use of replacement parts of lesser quality than that of genuine Mazda replacement parts, or not being aware of any revision of this manual.

GENERAL INFORMATION

HOW TO USE THIS MANUAL I-2
HOW TO READ EFFICIENT REPLACEMENT OF BODY PANELS..... I-2
HOW TO READ BODY DIMINSIONS..... I-3
SERVICE PRECAUTIONS I-5
SERVICE PRECAUTIONS I-5
EFFICIENT REPLACEMENT OF BODY PANELS..... I-7
EFFICIENT REMOVAL OF BODY PANELS..... I-7
INSTALLATION PREPARATIONS I-8
EFFICIENT INSTALLATION OF BODY PANELS..... I-9
AFTER-INSTALLATION RUST PROOFING, NOISE AND VIBRATION INSULATING I-12

HOW TO USE THIS MANUAL

HOW TO READ EFFICIENT REPLACEMENT OF BODY PANELS

A6E201000001B01

- This section contains information on the body panels in regard to the welding types, number of spot welds, and cut-and-join locations that are necessary for panel removal and installation.
- The type of weld and positions and indicated by symbol.
- Some sections have notes concerning the operation being performed. thoroughly read and understand the notes before carrying out any procedures.

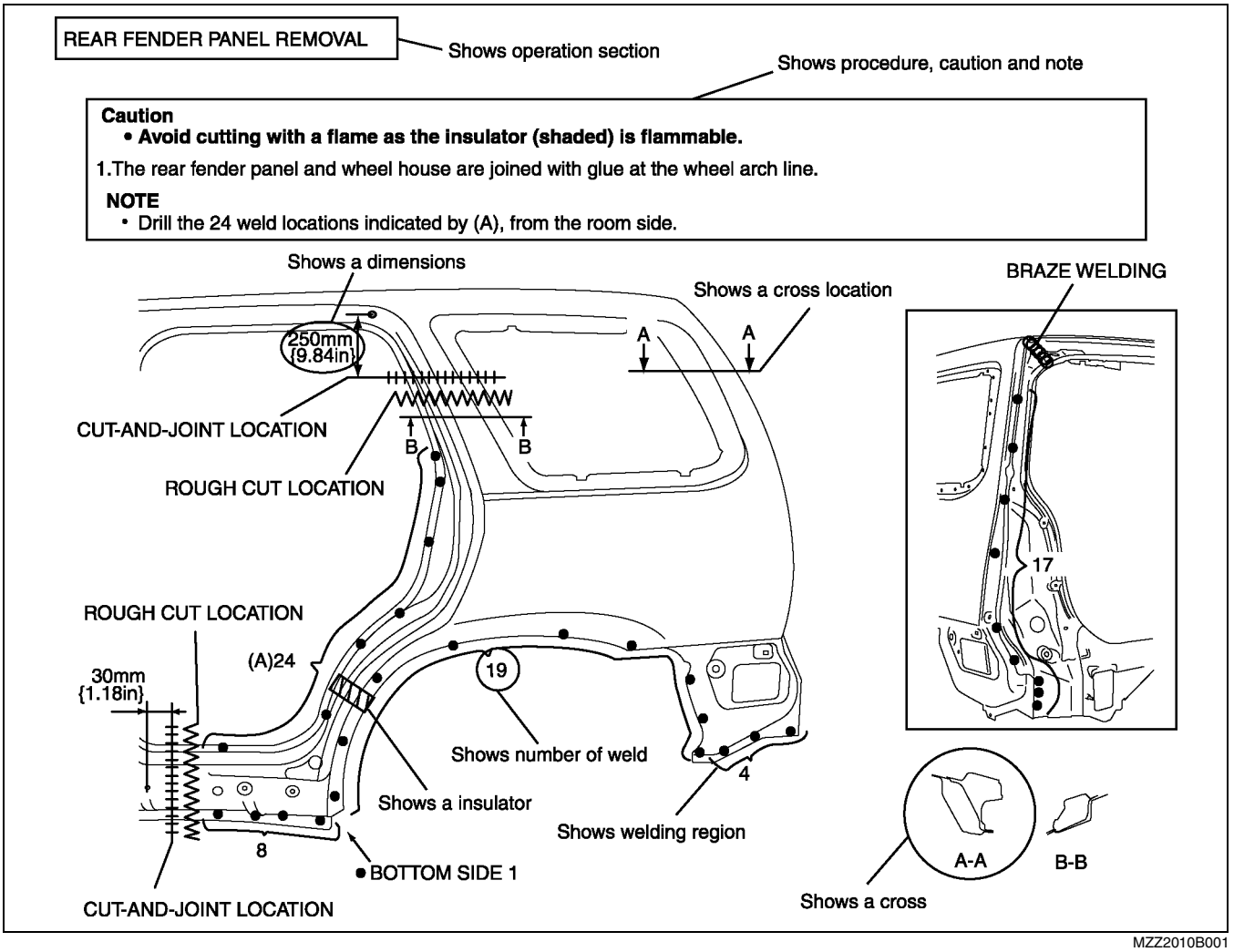

MZZ2010B001

Symbols of Panel Replacement

- The following 6 symbols are used to indicate the type of weld that is used when replacing body panels.

SYMBOL	MEANING
●	Spot welding
■	CO^2 arc welding (plug welding)
+	CO^2 spot welding

SYMBOL	MEANING
|||||||||	Continuous MIG welding (Cut-and-join location)
◯◯◯	Braze welding
∧∧∧	Rough cut location

MZZ2010B002

HOW TO READ BODY DIMINSIONS

A6E201000001B02

Body Dimensions (Flat-plane Dimensions)

- Flat-plane dimensions are the dimensions measured by projecting certain reference points onto a plane surface.
- When there are no specific indications, the standard points and dimensions are symmetrical in regard to the center of the vehicle.
- The hypothetical lines may differ according to the vehicle model.
- The outline drawing shows the figure that projected vehicle from the upper side.

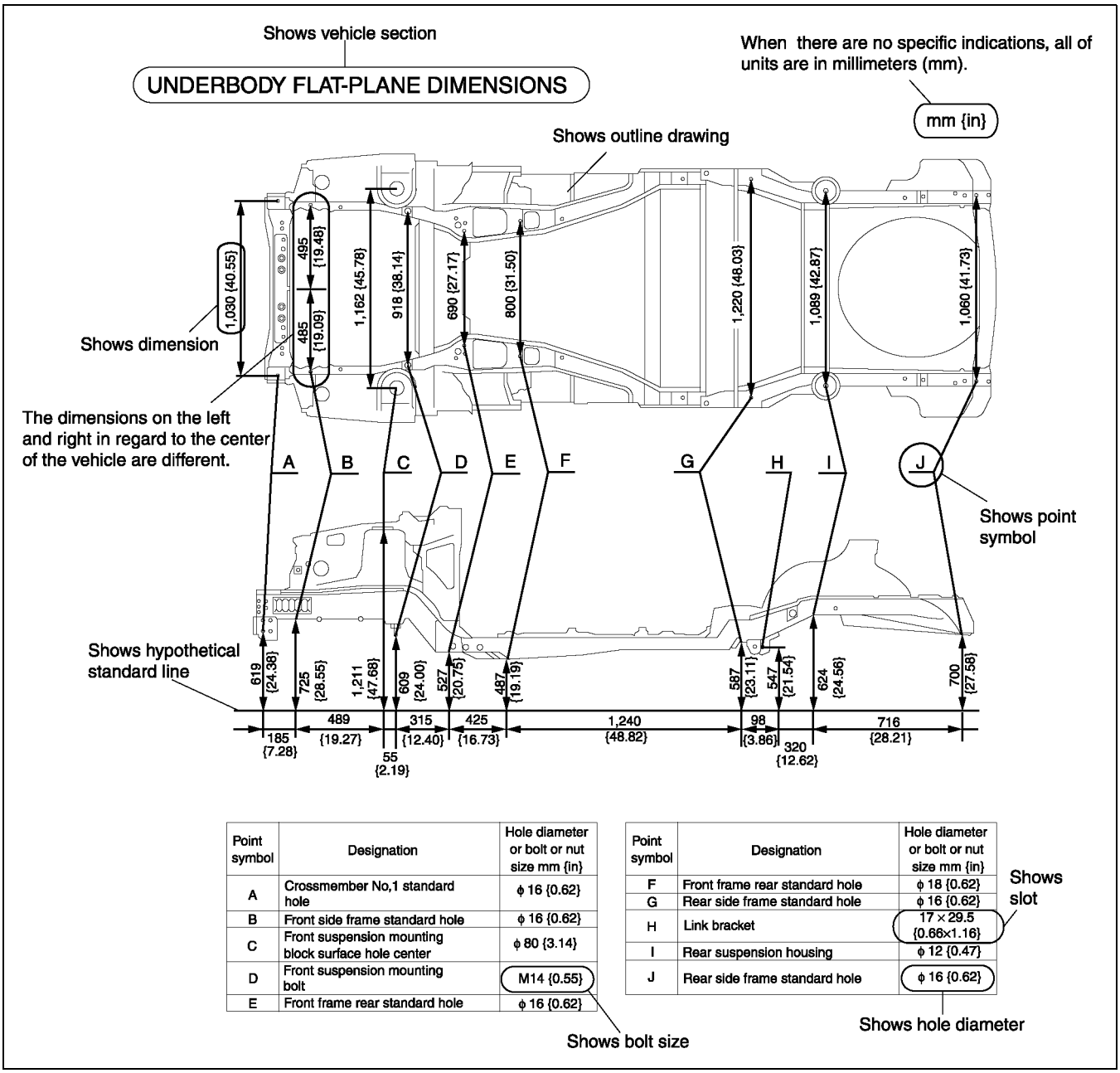

Point symbol	Designation	Hole diameter or bolt or nut size mm {in}
A	Crossmember No,1 standard hole	ϕ 16 {0.62}
B	Front side frame standard hole	ϕ 16 {0.62}
C	Front suspension mounting block surface hole center	ϕ 80 {3.14}
D	Front suspension mounting bolt	M14 {0.55}
E	Front frame rear standard hole	ϕ 16 {0.62}

Point symbol	Designation	Hole diameter or bolt or nut size mm {in}
F	Front frame rear standard hole	ϕ 18 {0.62}
G	Rear side frame standard hole	ϕ 16 {0.62}
H	Link bracket	17 × 29.5 {0.66×1.16}
I	Rear suspension housing	ϕ 12 {0.47}
J	Rear side frame standard hole	ϕ 16 {0.62}

MZZ2010B003

Body Dimensions (Straight-line Dimensions)

- Straight-line dimensions are the actual dimensions between two standard points.
- When there are no specific indications, the standard points and dimensions are symmetrical in regard to the center of the vehicle.

ROOM STRAIGHT-LINE DIMENSIONS (2)

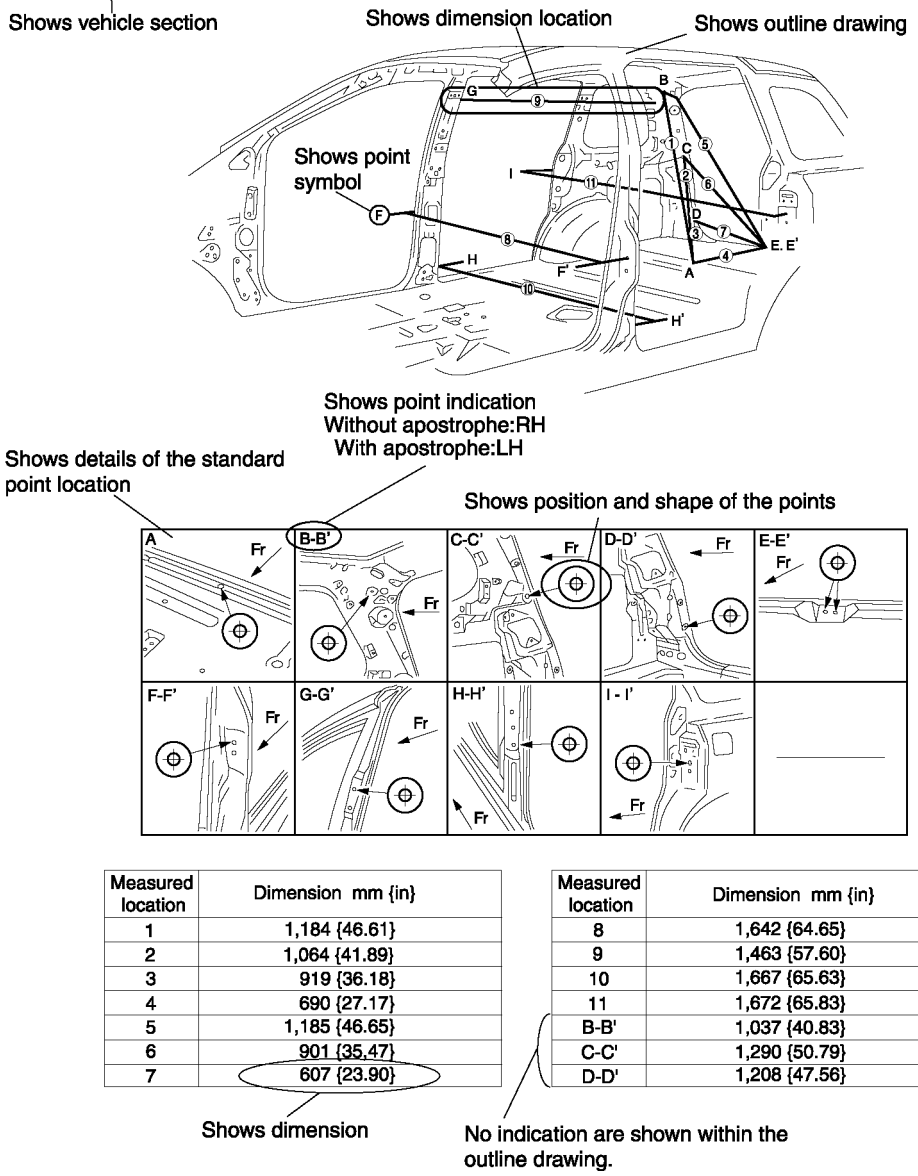

Measured location	Dimension mm {in}
1	1,184 {46.61}
2	1,064 {41.89}
3	919 {36.18}
4	690 {27.17}
5	1,185 {46.65}
6	901 {35.47}
7	607 {23.90}

Measured location	Dimension mm {in}
8	1,642 {64.65}
9	1,463 {57.60}
10	1,667 {65.63}
11	1,672 {65.83}
B-B'	1,037 {40.83}
C-C'	1,290 {50.79}
D-D'	1,208 {47.56}

MZZ2010B004

Symbols of Body Dimensions

- The following 8 symbols are used to indicate the standard points.

SYMBOL	MEANING
	Center of circular hole
	Center elliptical hole
	Edge of hole
	Notch

SYMBOL	MEANING
	Panel seam, bead, etc.
(arrow only)	Bolt tip
	Center of rectangular-shaped hole
	Edge of rectangular-shaped hole

MZZ2010B005

SERVICE PRECAUTIONS

SERVICE PRECAUTIONS

A6E203600025B01

Arrangement of Workshop

- Arrangement of the workshop is important for safe and efficient work.

Safety Precautions

- Protective head covering and safety shoes should always be worn. Depending upon the nature of the work, gloves, safety glasses, ear protectors, face shield, etc., should also be used.

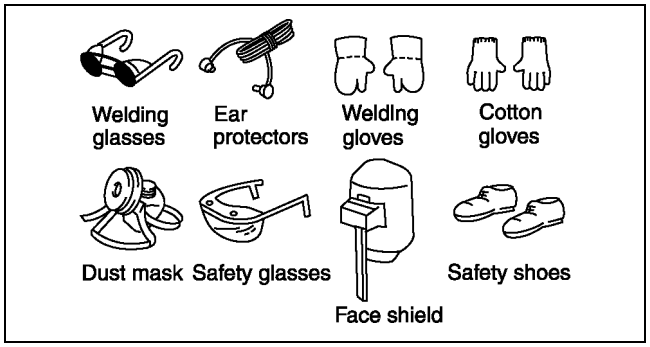

MZZ2036B001

Vehicle Protection

- Use seat covers and floor covers.
- Use heat-resistant protective covers to protect glass areas and seats from heat or sparks during welding.
- Protect items such as moldings, garnishes, and ornaments with tape when welding.

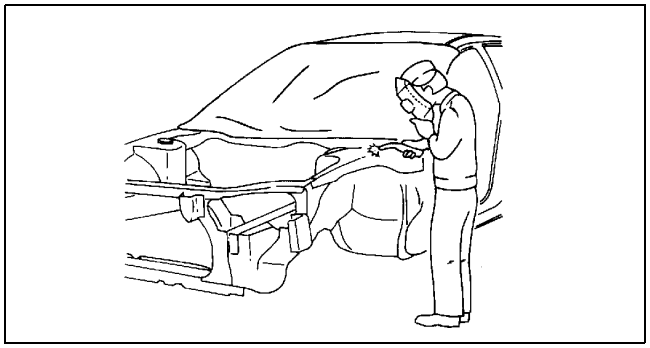

MZZ2036B002

Remove Dangerous Articles

- Remove the fuel tank before using an open flame in that area. Plug connection piping to prevent fuel leakage.

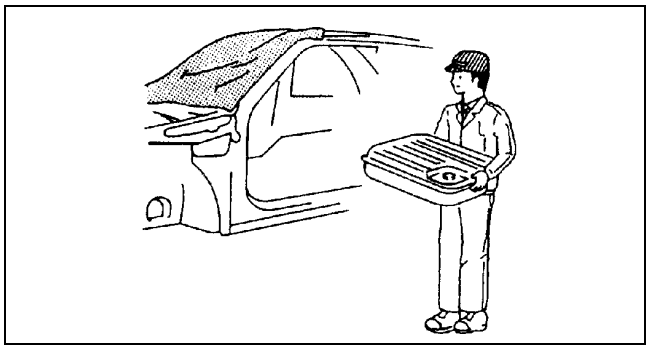

MZZ2036B003

Use of Pulling Equipment

- When using pulling equipment, keep away from the pulling area and use safety wires to prevent accidents.

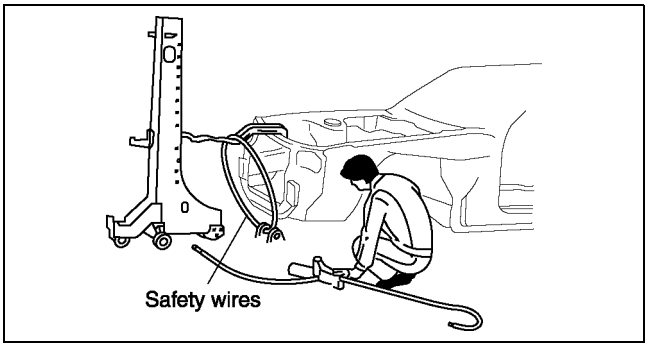

MZZ2036B004

Prevent Short Circuits

- Turn the ignition switch to the LOCK position.
- Disconnect the buttery cables.

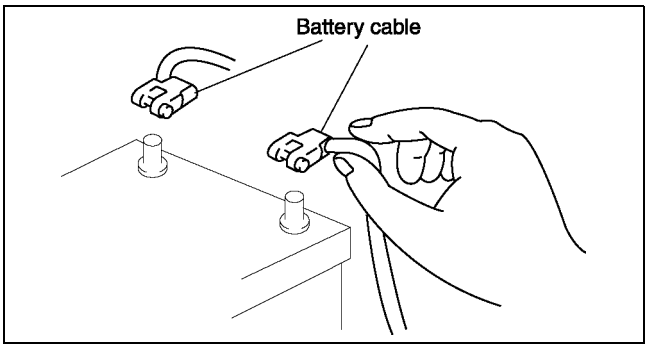

MZZ2036B005

- Securely connect the welding machine ground near the welding area.

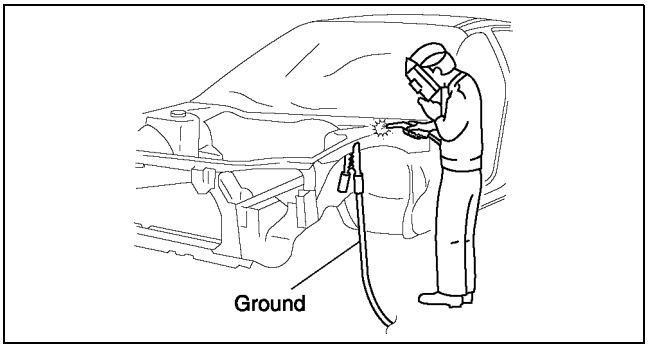

MZZ2036B006

EFFICIENT REPLACEMENT OF BODY PANELS

EFFICIENT REMOVAL OF BODY PANELS

A6E203800026B01

Body Measurements

- Before removal or rough-cutting, first measure the body at and around the damaged area against the standard reference dimension specifications. If there is deformation, use frame repair equipment to make a rough correction.

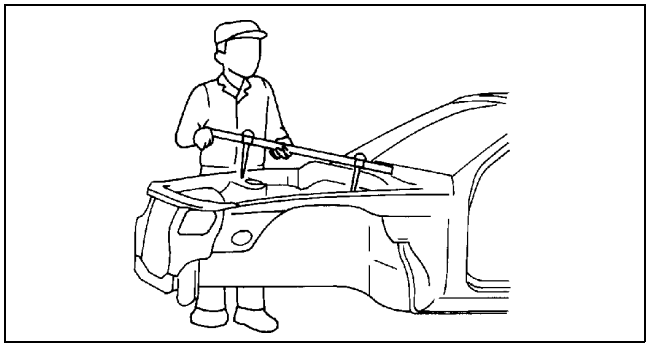

MZJ2038B001

Prevention of Body Deformation

- Use a clamp or a jack for removal and reinforce at and around the rough-cutting location to prevent deforming of the body.

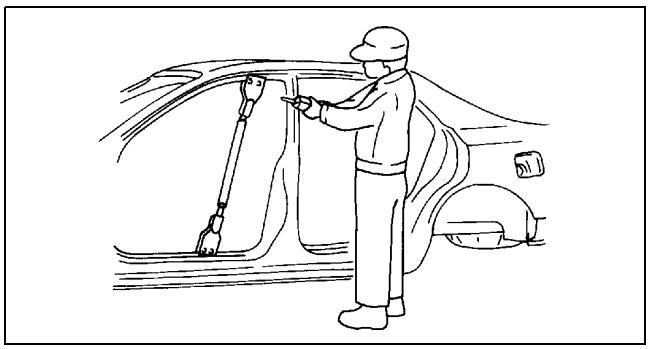

MZJ2038B002

Selection of Cut-and-join Locations

- For parts where complete replacement is not feasible, careful cutting and joining operations should be followed. If the location to be cut is a flat area where there is no reinforcement, the selected cutting location should be where the welding distortion will be minimal.

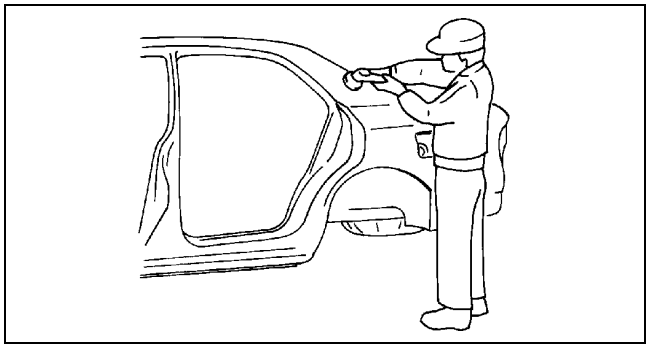

MZJ2038B003

Remove of Associated Parts

- Protect moldings, garnishes, and ornaments with tape when removing associated parts.

Rough Cutting of Damaged Panel

- Verify that there are no parts (such as pipes, hoses, and wiring harness) nearby or on the opposite side of a panel which could be damaged by heat.
- For cut-and-join areas, allow for an overlap of 30—50 mm {1.18—1.97 in} and then rough-cut the damaged panel.

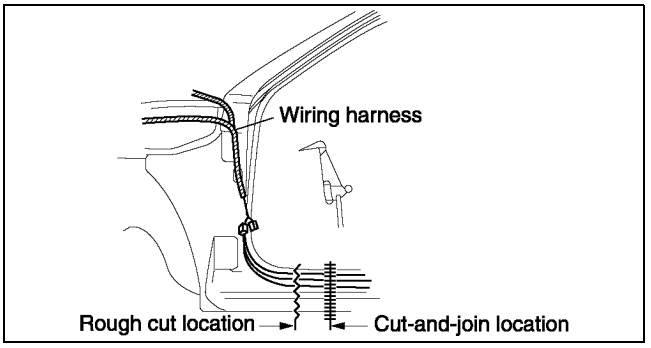

MZZ2038B001

INSTALLATION PREPARATIONS

A6E203800026B02

Rough Cutting of New Parts

- For cut-and-join areas, allow for an overlap of 30—50 mm {1.18—1.97 in} with the remaining area on the body side and then rough-cut the new parts.

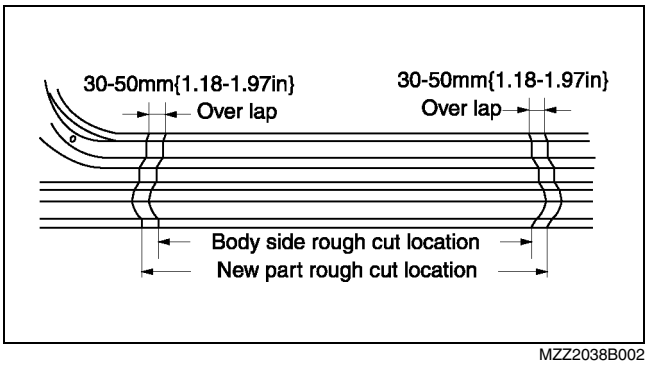

MZZ2038B002

Determination of Welding Method

- If the total thickness at the area to be welded is 3 mm {0.12 in} or more, use a CO_2 gas shielded-arc welder to make the plug welds.

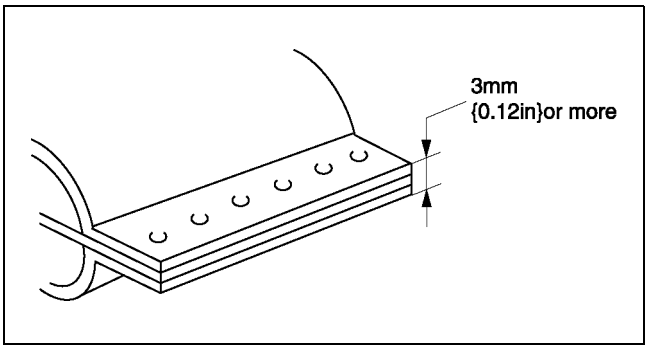

MZZ2038B003

Making Holes for CO_2 Arc Welding

- For places that cannot be spot welded, make a hole for CO_2 arc welding using a punch or drill as follows.

(mm {in})

Board thickness (ø)	Hole diameter (ø)
0.60—0.90 {0.02—0.03}	5 {0.19}
0.91—1.20 {0.04—0.05}	6 {0.23}
1.21—1.80 {0.051—0.07}	8 {0.31}
1.81—4.50 {0.071—0.17}	10 {0.39}

- Grind the shaded section indicated in the diagram below and create a hole in the part where the 3—4 plates are put together. Also, weld the plates together tightly so that gaps do not develop.

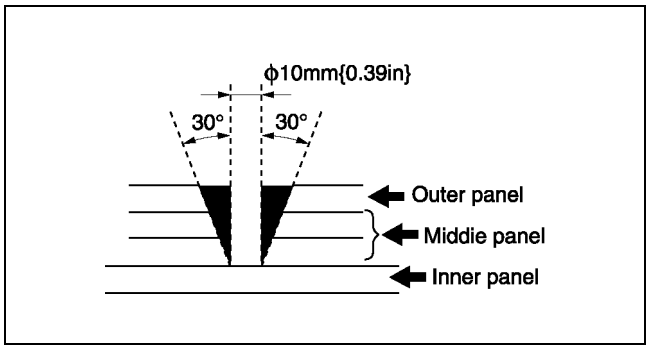

MZZ2038B004

Application of Weld-through Primer

- For treatment against corrosion, remove the paint grease, and other material from the portion of new part and body to be welded, and apply weld-through primer.

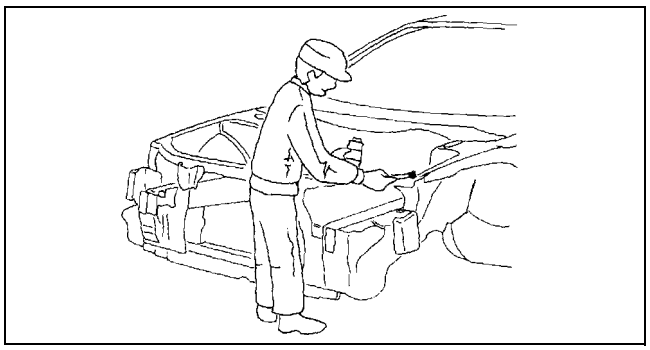

MZJ2038B008

EFFICIENT INSTALLATION OF BODY PANELS

A6E203800026B03

Checking Preweld Measurements And Watching

- Align to the standard reference dimensions, based upon the body dimensions illustration, so that new parts are installed in the correct position.

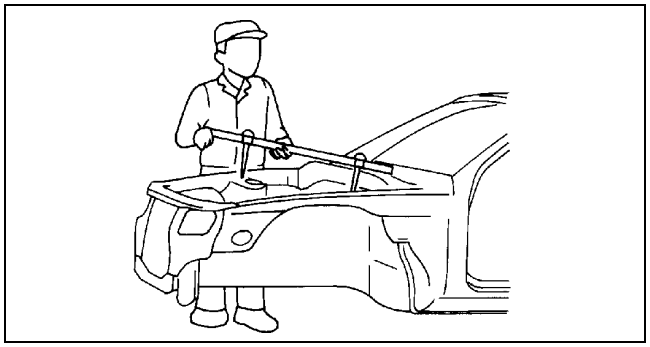

MZJ2038B009

Welding Notes

- For the number of weld points, welding should be performed in accordance with the following reference standards.

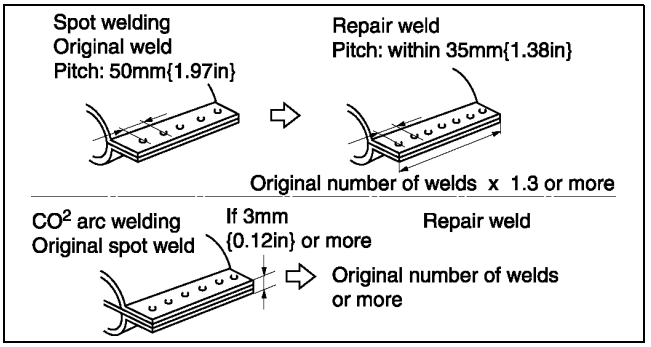

MZZ2038B005

Spot Welding Notes

- The shape of the spot welder tip is D=(2×t)+3. If the upper panel thickness is different from that of the under panel, adjust to the thinner one.

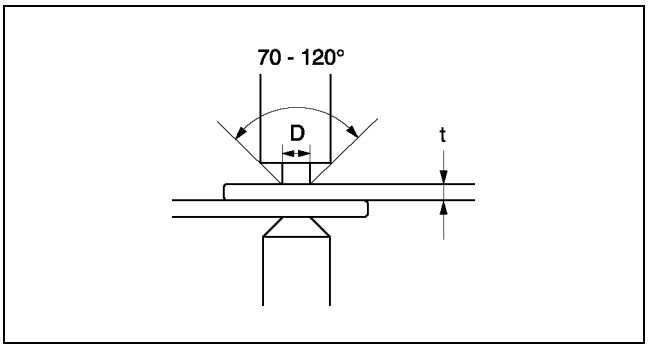

MZZ2038B009

- Because the weld strength is affected by the shape of the spot welder tip, the optimum condition of the tip should always be maintained.
- Spot welds should be made at points other than the originally welded points.

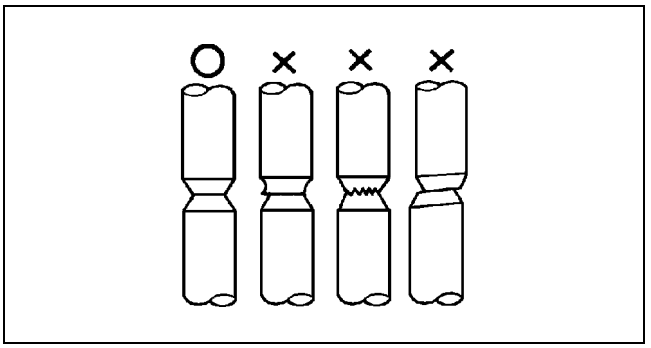

MZJ2038B012

- Before spot welding, make a trial weld using the same material as the body panel to check the weld strength.

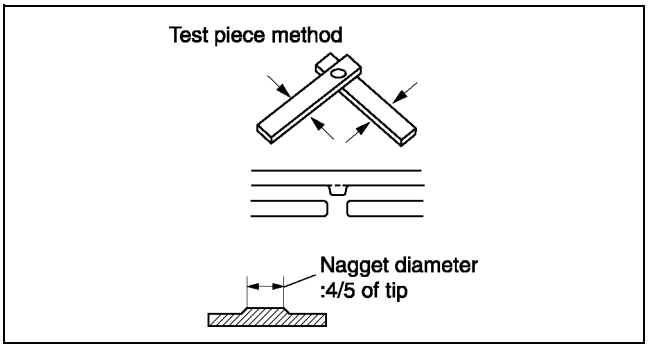

MZZ2038B006

Checking Weld Strength

- Installation locations of the engine, chassis, and seat belts are designated as important safety locations for weld strength. Check weld strength by driving a chisel between the panels at every fourth or fifth weld spot, and every tenth regular weld location.

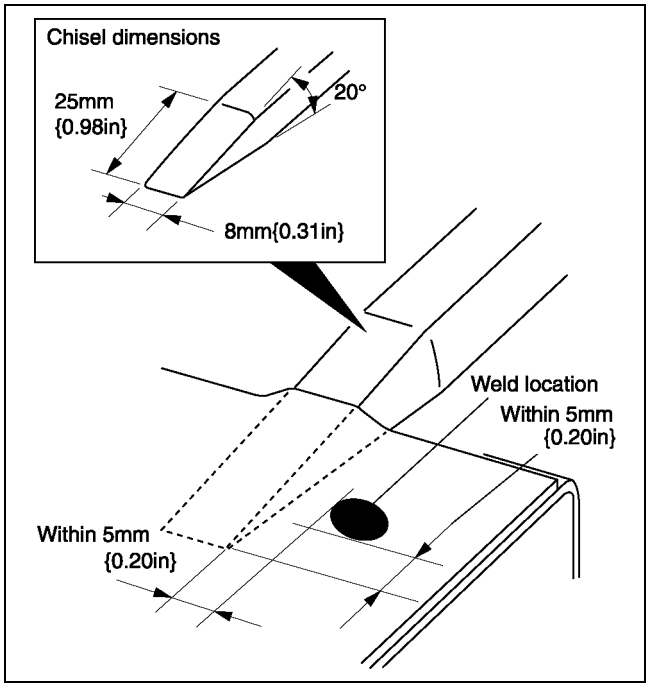

MZZ2038B007

- Drive the chisel between the panels according to the number of panels as shown below.
- To determine weld strength, drive the chisel between the panel and check whether the panels come apart. If the panels come apart, make another weld near the original weld.
- Restore the shape of the checked area.

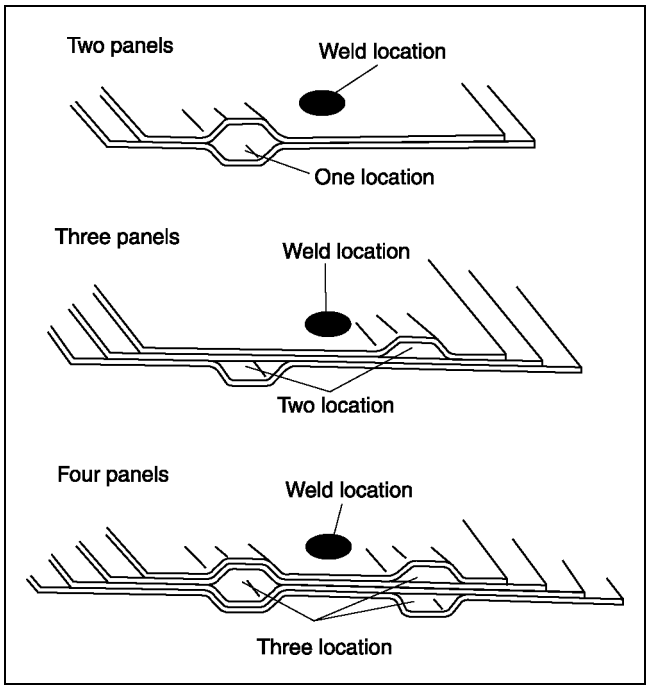

MZZ2038B008

AFTER-INSTALLATION RUST PROOFING, NOISE AND VIBRATION INSULATING

A6E203800026B04

Body Sealing

- Apply body sealer where necessary.
- For locations where application of body sealer is difficult after installation, apply it before installation.

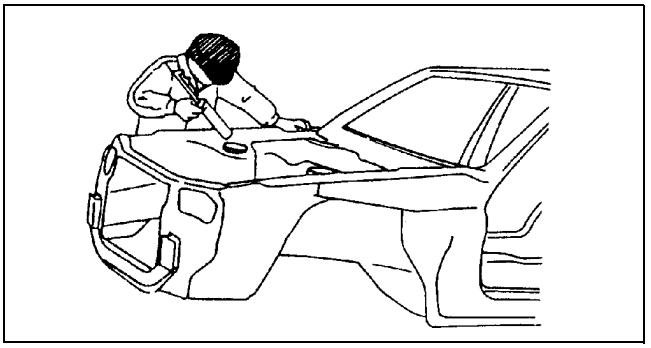

MZJ2038B016

Application of Undercoating

- Apply an undercoat to the required location of the body.

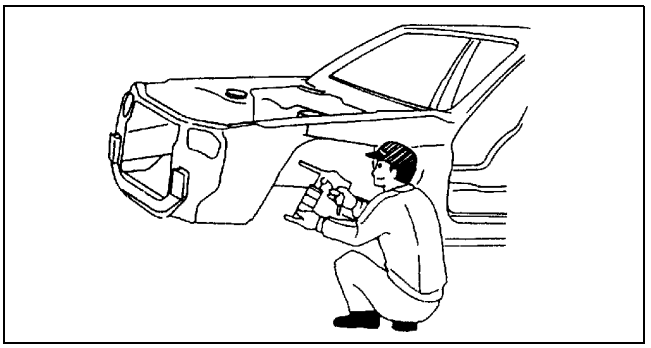

MZJ2038B017

Application of Rust Inhibitor

- Apply rust inhibitor (wax, oil, etc.) to the back of the welded areas.

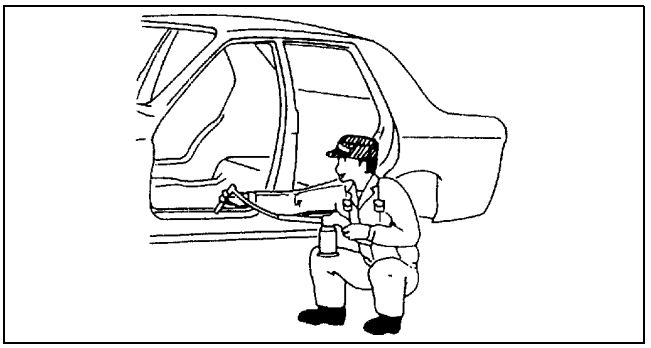

MZJ2038B018

Application of Floor Silencer

- Apply floor silencer by heating with an infrared ray lamp.

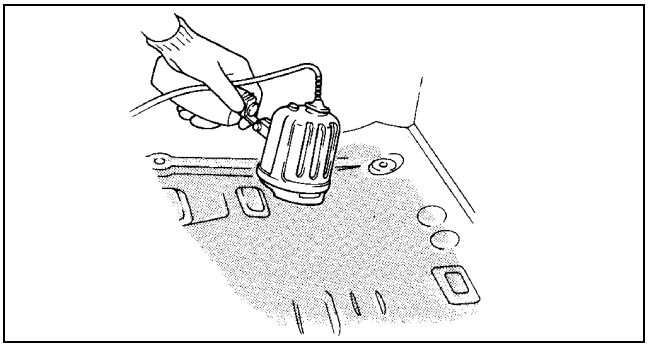

MZJ2038B019

ABBREVIATION

5HB	Five-door hatchback
Fr	Front
Rr	Rear
RH	Right
LH	Left
M	Metallic
MC	Mica

CONSTRUCTION

CONSTRUCTION II-2
CONSTRUCTION II-2

CONSTRUCTION

CONSTRUCTION

A6E981007000B01

SEDAN

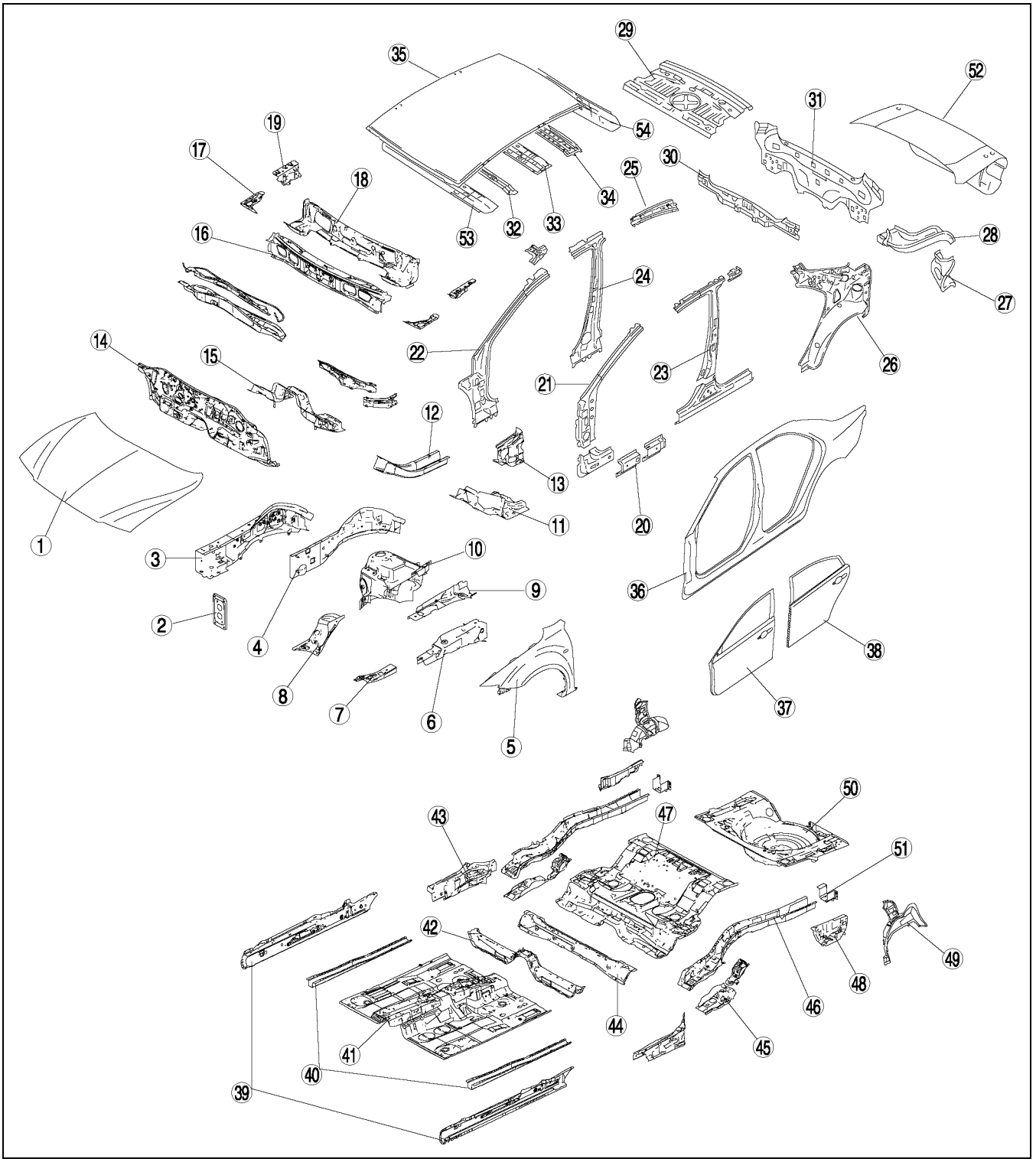

A6J9810B001

x:Applied
-:Not applied

No.	Part Name		High-tension steel	Rust proof steel	Thickness (mm) {in}
1	Bonnet		x	x	0.7{0.028}
2	Front bumper bracket		-	-	2.9{0.114}
3	Front side frame inner	Fr	x	x	1.6{0.063}
		Rr	x	x	2.6{0.102}
4	Front side frame outer	Fr	x	x	1.4{0.055}
		Rr	x	x	2.0{0.079}
5	Front fender panel		x	x	0.75 {0.030}
6	Apron reinforcement upper		-	x	1.0 {0.039}
7	Shroud upper reinforcement		-	x	2.0{0.079}
8	Wheel apron panel front		-	x	0.65 {0.026}
9	Apron reinforcement lower		-	x	1.0 {0.039}
10	Suspension housing	Upper	x	x	3.2{0.126}
		Lower	-	x	1.2{0.047}
11	Torque box		-	x	1.4{0.055}
12	Front frame rear		x	x	2.9{0.114}
13	Cowl side reinforcement		-	x	1.2 {0.047}
14	Dash lower panel		-	x	0.85 {0.033}
15	Member dash lower		-	x	1.6{0.063}
16	Cowl panel		-	x	0.7{0.028}
17	Cowl upper plate		-	x	1.6{0.063}
18	Dash upper panel		-	x	0.9{0.035}
19	Cowl upper plate		x	x	1.4{0.055}
20	Side sill reinforcement		x	x	0.9 {0.035}
21	Front pillar reinforcement		x	-	1.8 {0.071}
22	Front pillar inner	Upper	x	-	1.6{0.063}
		Lower	x	-	1.4{0.055}
23	Center pillar reinforcement	Upper front	x	-	1.8{0.071}
		Upper rear	x	-	1.6{0.063}
		Center	x	-	2.0{0.079}
		Lower	x	-	1.8 {0.071}
24	Center pillar inner	Upper	x	-	1.6{0.063}
		Center	x	-	1.2{0.047}
		Lower	x	-	1.0{0.039}

No.	Part Name		High-tension steel	Rust proof steel	Thickness (mm) {in}
25	Roof rail inner		x	-	1.2{0.047}
26	Rear pillar inner		-	x	0.65 {0.026}
27	Corner plate		-	x	0.7{0.028}
28	Rear fender rain rail		-	x	0.7{0.028}
29	Package tray		-	-	0.65 {0.026}
30	Rear end member		-	-	0.6{0.024}
31	Rear end panel		-	x	0.65 {0.026}
32	Roof reinforcement		-	-	0.5{0.020}
33	Roof reinforcement		x	-	1.4{0.055}
34	Roof reinforcement		-	-	0.55 {0.022}
35	Roof panel		-	-	0.75 {0.030}
36	Side frame outer		-	x	0.7{0.028}
37	Front door		-	x	0.7{0.028}
38	Rear door		-	x	0.7{0.028}
39	Side sill inner		x	x	1.6{0.063}
40	Front B frame	Fr	x	x	2.3{0.091}
		Rr	-	x	1.6{0.063}
41	Front floor pan		-	x	0.65 {0.026}
42	Crossmember No.2		-	-	1.2{0.047}
43	Side sill inner rear		x	x	1.6{0.063}
44	Crossmember No.3		x	-	1.4{0.055}
45	Link bracket		x	x	2.3 {0.091}
46	Rear side frame	Fr	x	x	1.8{0.071}
		Rr	x	x	1.4{0.055}
47	Center floor pan		-	x	0.6{0.024}
48	Floor side panel		-	x	0.6{0.024}
49	Wheel house inner		-	x	0.75 {0.030}
50	Rear floor pan		-	x	0.65{0.26}
51	Rear bumper bracket	LH	x	x	2.0{0.079}
		RH	x	x	1.4{0.055}
52	Trunk lid panel		-	x	0.75 {0.030}
53	Front header		-	-	1.2{0.047}
54	Rear header		-	-	0.65 {0.026}

5HB

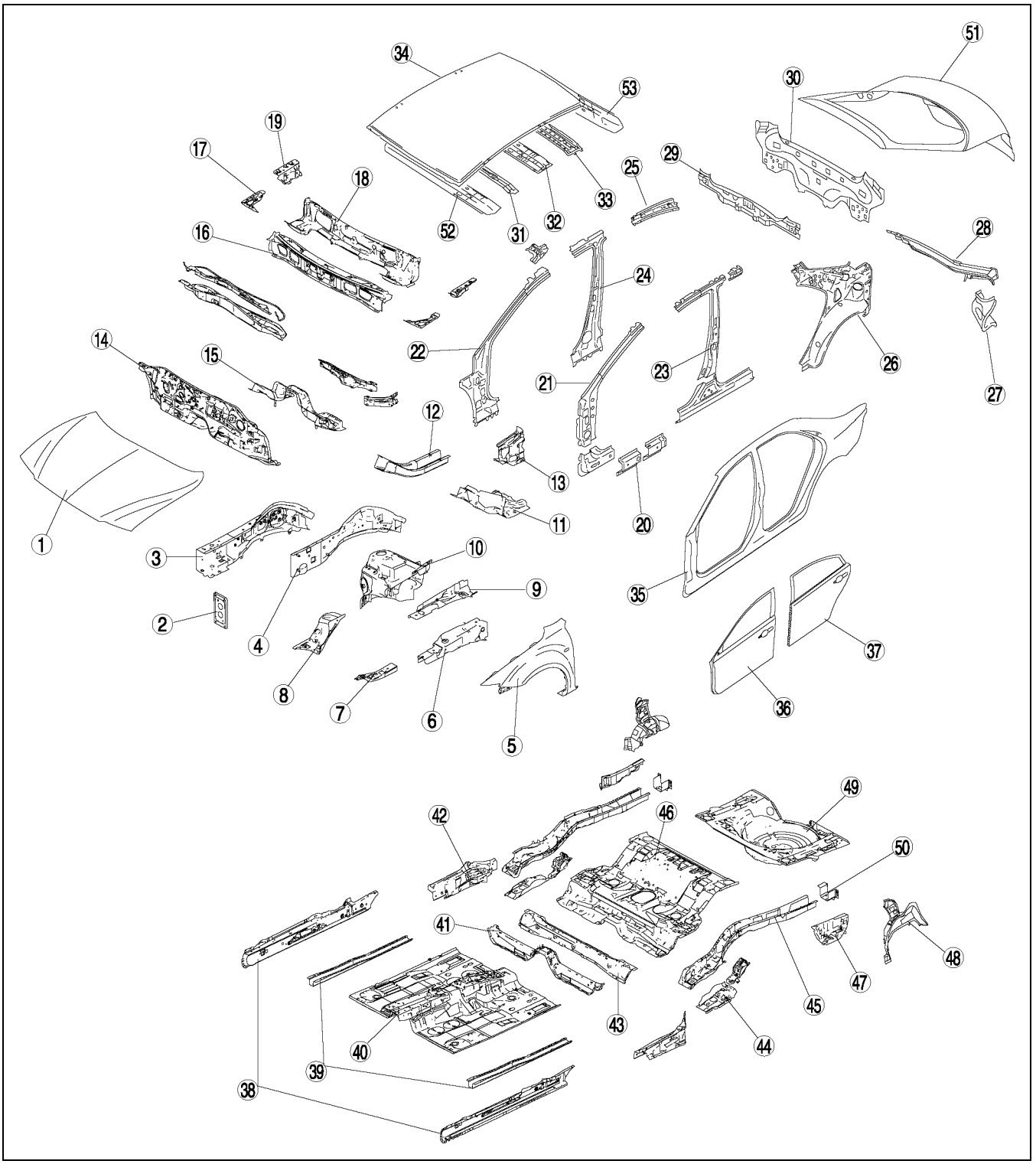

A6J9810B002

x:Applied
-:Not applied

No.	Part Name		High-tension steel	Rust proof steel	Thickness (mm) {in}
1	Bonnet		x	x	0.7{0.028}
2	Front bumper bracket		-	-	2.9{0.114}
3	Front side frame inner	Fr	x	x	1.6{0.063}
		Rr	x	x	2.6{0.102}
4	Front side frame outer	Fr	x	x	1.4{0.055}
		Rr	x	x	2.0{0.079}
5	Front fender panel		x	x	0.75 {0.030}
6	Apron reinforcement upper		-	x	1.0 {0.039}
7	Shroud upper reinforcement		-	x	2.0 {0.079}
8	Wheel apron panel front		-	x	0.65 {0.026}
9	Apron reinforcement lower		-	x	1.0 {0.039}
10	Suspension housing	Upper	x	x	3.2{0.126}
		Lower	-	x	1.2{0.047}
11	Torque box		-	x	1.4{0.055}
12	Front frame rear		x	x	2.9{0.114}
13	Cowl side reinforcement		-	x	1.2 {0.047}
14	Dash lower panel		-	x	0.85 {0.033}
15	Member dash lower		-	x	1.6{0.063}
16	Cowl panel		-	x	0.7{0.028}
17	Cowl upper plate		-	x	1.6{0.063}
18	Dash upper panel		-	x	0.9{0.035}
19	Cowl upper plate		x	x	1.4{0.055}
20	Side sill reinforcement		x	x	0.9 {0.035}
21	Front pillar reinforcement		x	-	1.8 {0.071}
22	Front pillar inner	Upper	x	-	1.6{0.063}
		Lower	x	-	1.4{0.055}
23	Center pillar reinforcement	Upper front	x	-	1.8{0.071}
		Upper rear	x	-	1.6{0.063}
		Center	x	-	2.0{0.079}
		Lower	x	-	1.8 {0.071}
24	Center pillar inner	Upper	x	-	1.6{0.063}
		Center	x	-	1.2{0.047}
		Lower	x	-	1.0{0.039}

No.	Part Name		High-tension steel	Rust proof steel	Thickness (mm) {in}
25	Roof rail inner		x	-	1.2{0.047}
26	Rear pillar inner		-	x	0.65 {0.026}
27	Corner plate		-	x	0.7{0.028}
28	Rear fender rain rail		-	x	0.8{0.031}
29	Rear end member		-	-	0.6{0.024}
30	Rear end panel		-	x	0.65 {0.026}
31	Roof reinforcement		-	-	0.5{0.020}
32	Roof reinforcement		x	-	1.4{0.055}
33	Roof reinforcement		-	-	0.55 {0.022}
34	Roof panel		-	-	0.75 {0.030}
35	Side frame outer		-	x	0.7{0.028}
36	Front door		-	x	0.7{0.028}
37	Rear door		-	x	0.7{0.028}
38	Side sill inner		x	x	1.6{0.063}
39	Front B frame	Fr	x	x	2.3{0.091}
		Rr	-	x	1.6{0.063}
40	Front floor pan		-	x	0.65 {0.026}
41	Crossmember No.2		-	-	1.2{0.047}
42	Side sill inner rear		x	x	1.6{0.063}
43	Crossmember No.3		x	-	1.4{0.055}
44	Link bracket		x	x	2.3 {0.091}
45	Rear side frame	Fr	x	x	1.8{0.071}
		Rr	x	x	1.4{0.055}
46	Center floor pan		-	x	0.6{0.024}
47	Floor side panel		-	x	0.6{0.024}
48	Wheel house inner		-	x	0.75 {0.030}
49	Rear floor pan		-	x	0.65 {0.026}
50	Rear bumper bracket	LH	x	x	2.0{0.079}
		RH	x	x	1.4{0.055}
51	Liftgate panel		-	x	0.7{0.028}
52	Front header		-	-	1.2{0.047}
53	Rear header	Center	-	-	0.7 {0.028}
		Side	-	-	1.4{0.055}

PANEL REPLACEMENT

PANEL REPLACEMENT..... III-2
SHROUD UPPER REINFORCEMENT REMOVAL..... III-2
SHROUD UPPER RAINFORCEMENT INSTALLATION..... III-3
COWL SIDE REINFORCEMENT AND COWL UPPER PLATE REMOVAL..... III-4
COWL SIDE REINFORCEMENT AND COWL UPPER PLATE INSTALLATION..... III-5
APRON REINFORCEMENT ASSEMBLY REMOVAL..... .III-6
APRON REINFORCEMENT ASSEMBLY INSTALLATION..... III-7
WHEEL APRON PANEL ASSEMBLY REMOVAL..... III-8
WHEEL APRON PANEL ASSEMBLY INSTALLATION..... III-9
FRONT SIDE FRAME REMOVAL..... III-10
FRONT SIDE FRAME INSTALLATION..... III-11
FRONT PILLAR REMOVAL..... III-12
FRONT PILLAR INSTALLATION..... III-14
CENTER PILLAR REMOVAL..... III-16
CENTER PILLAR INSTALLATION..... III-17
REAR FENDER PANEL REMOVAL..... III-18
REAR FENDER PANEL INSTALLATION..... III-20
SIDE SILL PANEL REMOVAL..... III-22
SIDE SILL PANEL INSTALLATION..... III-23
REAR END PANEL REMOVAL..... III-24
REAR END PANEL INSTALLATION..... III-26
REAR FENDER RAIN RAIL AND CORNER PLATE REMOVAL..... III-28
REAR FENDER RAIN RAIL AND CORNER PLATE INSTALLATION..... III-30
REAR FLOOR PAN REMOVAL..... III-32
REAR FLOOR PAN INSTALLATION..... III-33
FLOOR SIDE PANEL REMOVAL..... III-34
FLOOR SIDE PANEL INSTALLATION..... III-36
REAR SIDE FRAME (PARTIAL CUTTING) REMOVAL..... III-38
REAR SIDE FRAME (PARTIAL CUTTING) INSTALLATION..... III-39
ROOF PANEL REMOVAL..... III-40
ROOF PANEL INSTALLATION..... III-42

For shroud panel removal/installation and replacement procedures, refer to the MAZDA6 Workshop Manual (1730-1*-02C)
***:Indicates the printing location**
E-Europe
0-Japan

PANEL REPLACEMENT

SHROUD UPPER REINFORCEMENT REMOVAL

A6E981253152B01

1. Remove the shroud upper reinforcement.

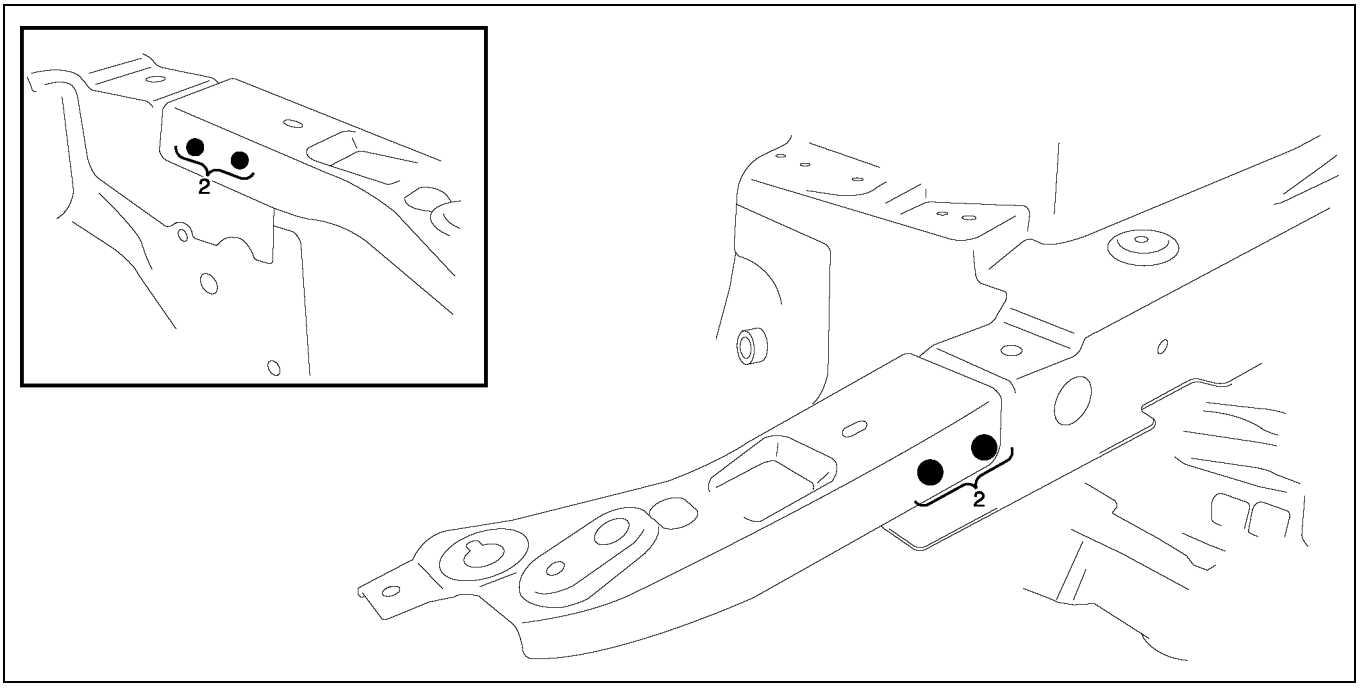

A6E9812B001

SHROUD UPPER RAINFORCEMENT INSTALLATION

A6E981253152B02

1. Drill holes for plug welds before installing new parts.
2. After trial-fitting new parts, make sure the related parts fit properly.

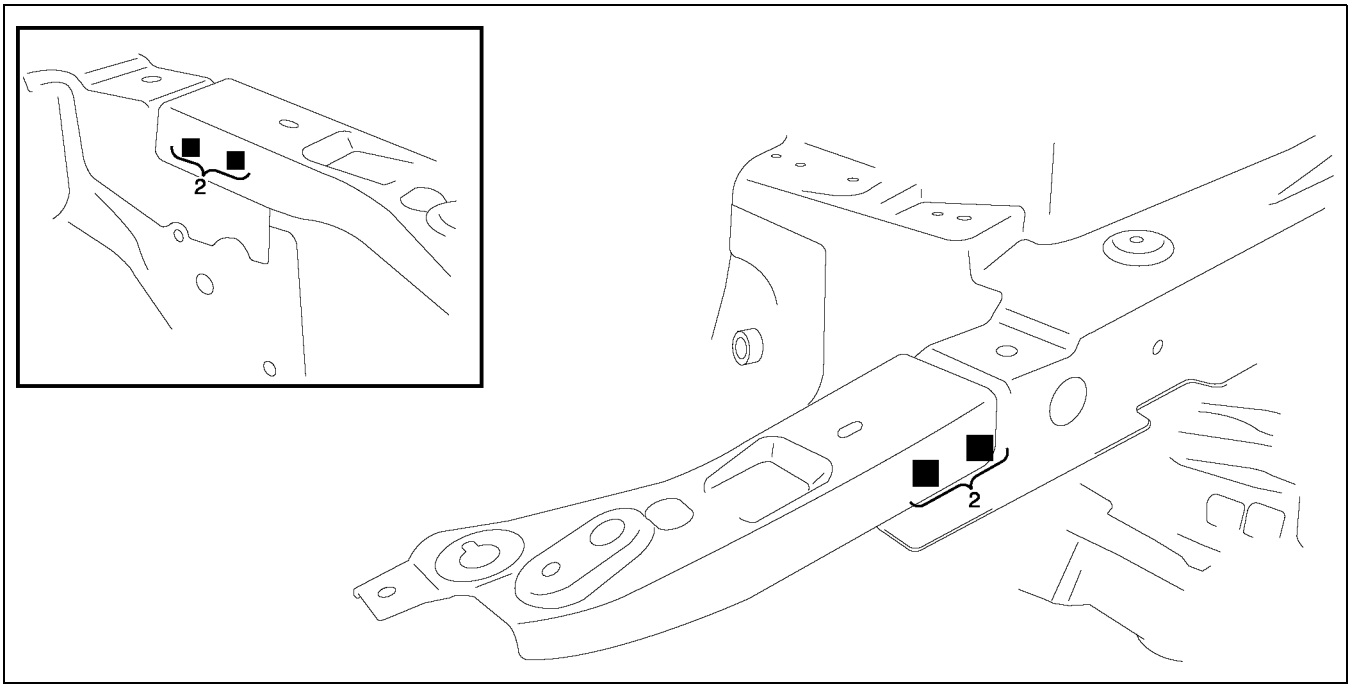

A6E9812B002

COWL SIDE REINFORCEMENT AND COWL UPPER PLATE REMOVAL

A6E981253290B01

1. Remove the cowl side reinforcement.

Note
- The weld locations (B) in the figure indicate the same locations.

Caution
- **Be careful not to damage the windshield when drilling the location indicated by (A).**

2. Remove the cowl upper plate.

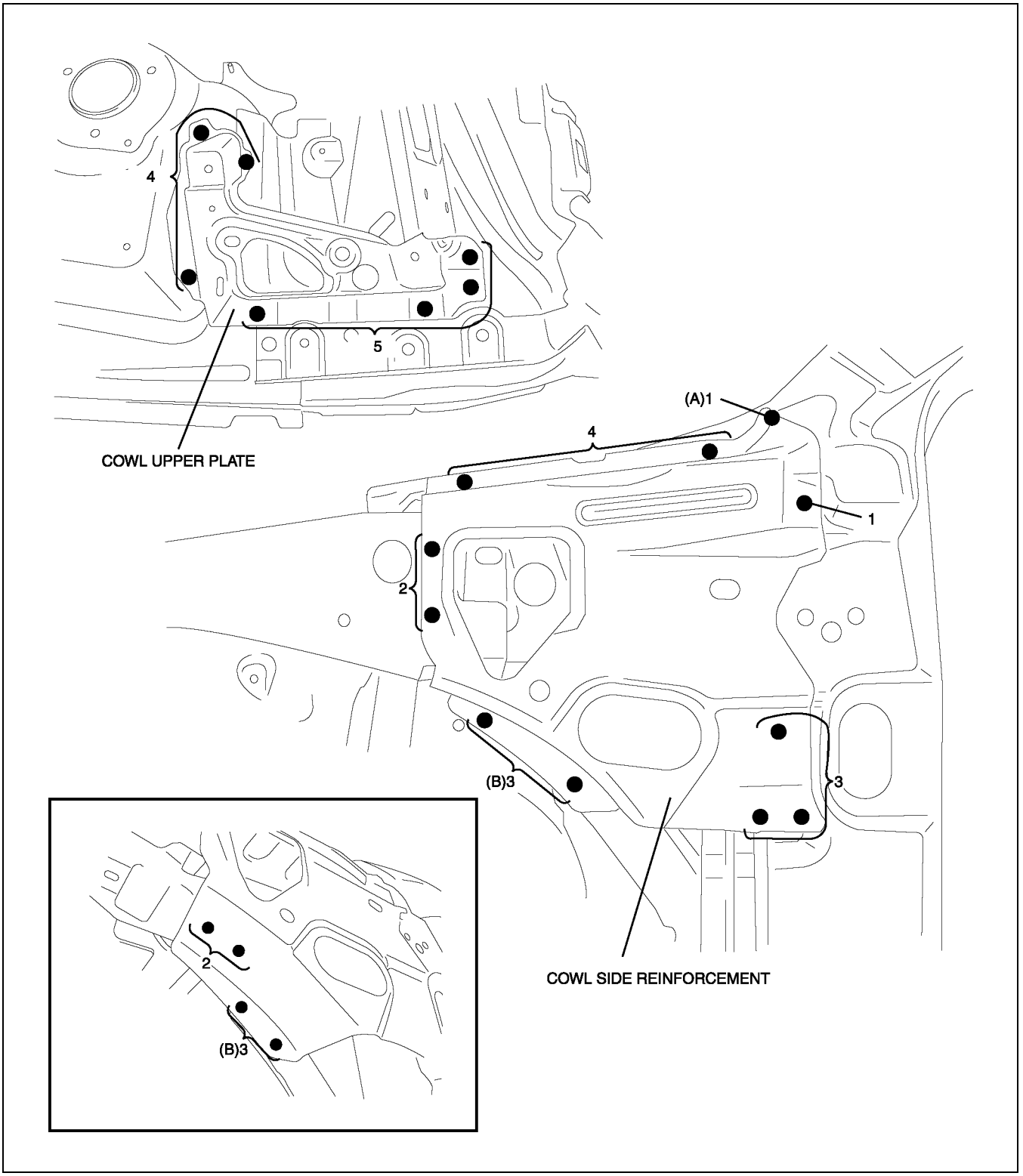

A6E9812B003

COWL SIDE REINFORCEMENT AND COWL UPPER PLATE INSTALLATION

A6E981253290B02

1. When installing new parts, position each part so that the section measurement aligns to the body dimension.
2. Drill holes for plug welds before installing new parts.
3. After trial-fitting new parts, make sure the related parts fit properly.

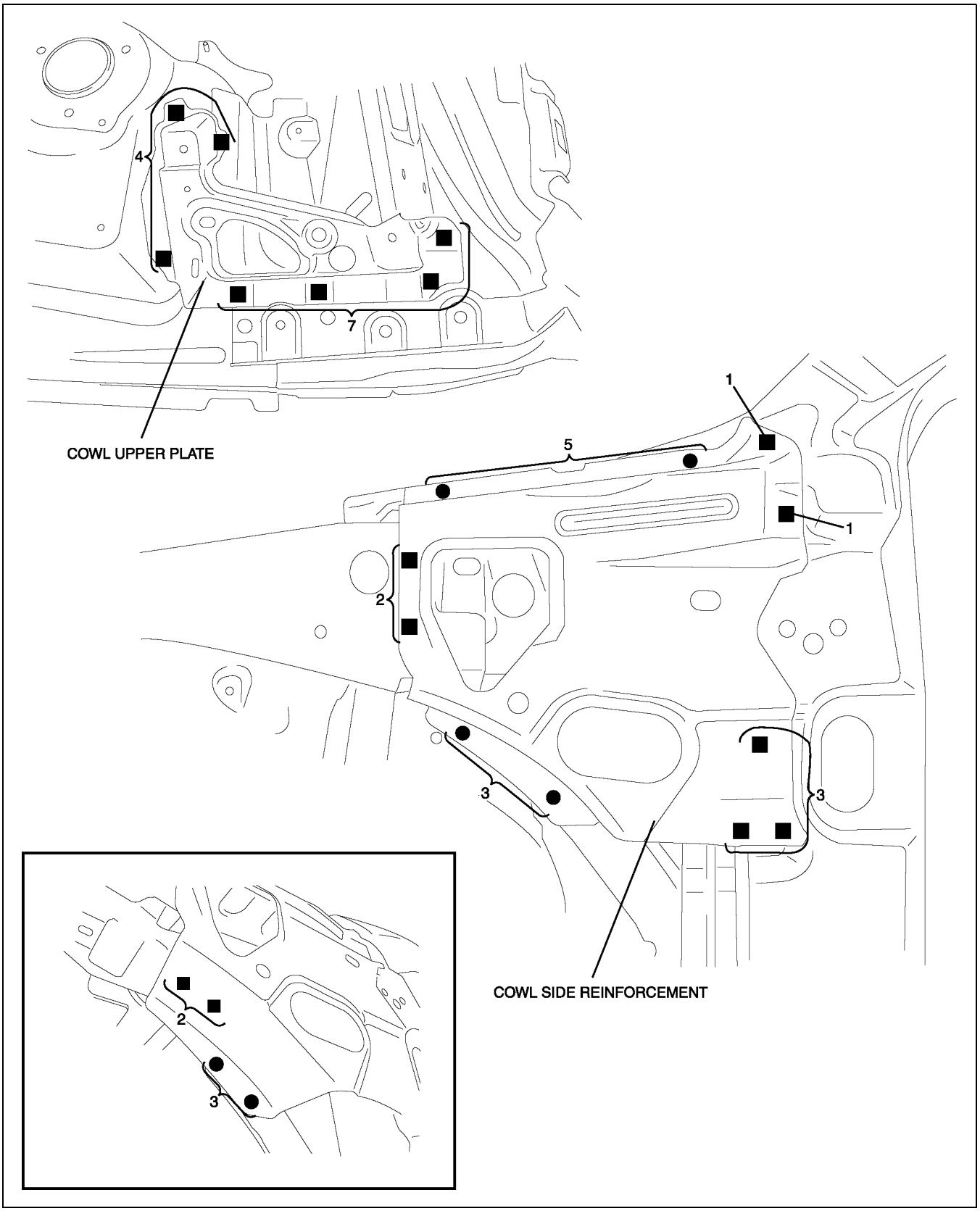

A6E9812B004

APRON REINFORCEMENT ASSEMBLY REMOVAL

A6E981253260B01

1. Rough cut the apron reinforcement upper.
2. Remove the apron reinforcement assembly.

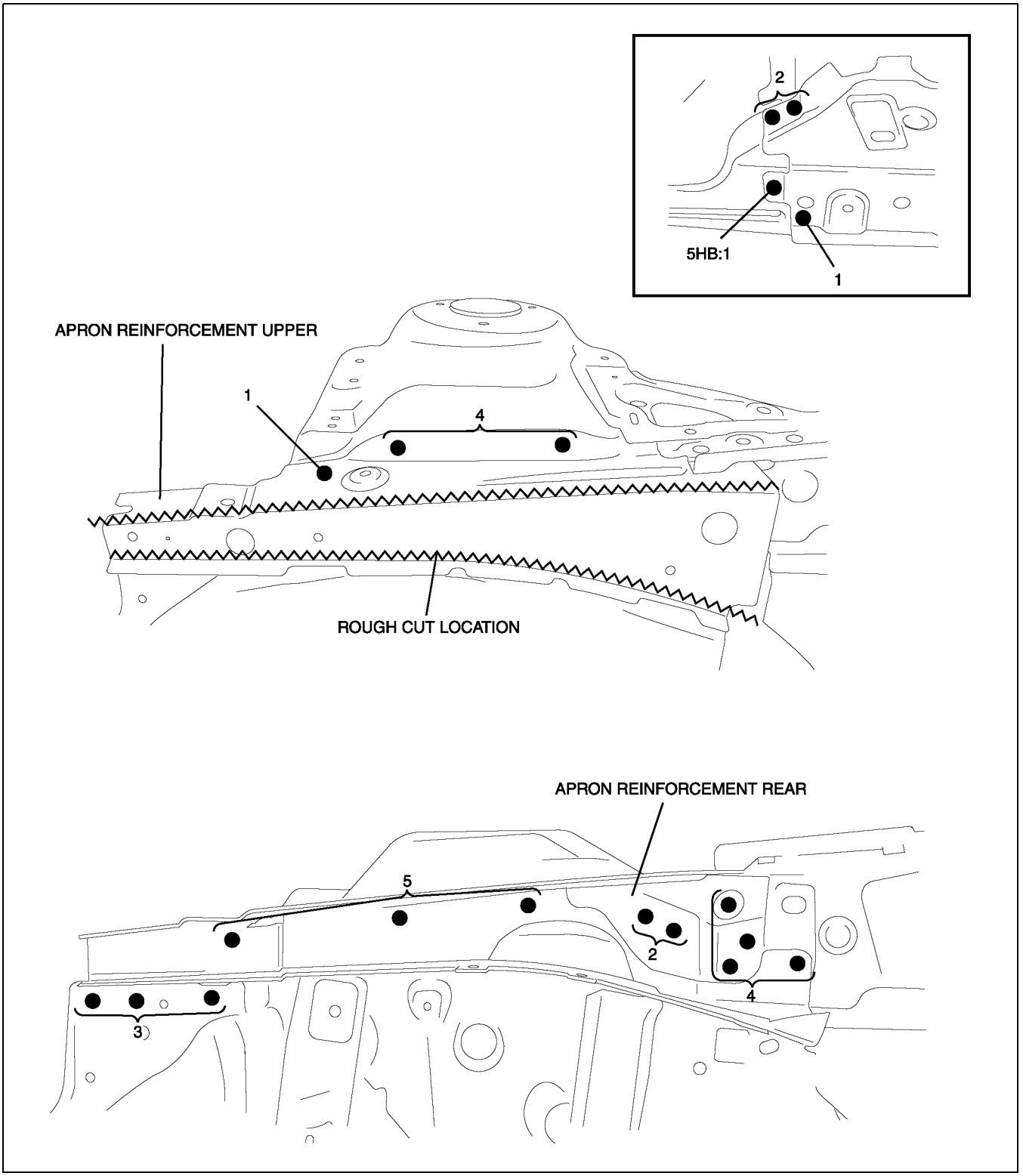

A6E9812B005

APRON REINFORCEMENT ASSEMBLY INSTALLATION

A6E981253260B02

1. When installing new parts, position each part so that the section measurement aligns to the body dimension.
2. Drill holes for plug welds before installing new parts.
3. Install in the following order: apron reinforcement lower,apron reinforcement rear, and apron reinforcement upper.

Note
- After installing, fillet weld in location (A).

Caution
- **When fillet welding, be careful of dripping, melted metal.**

4. After trial-fitting new parts, make sure the related parts fit properly.

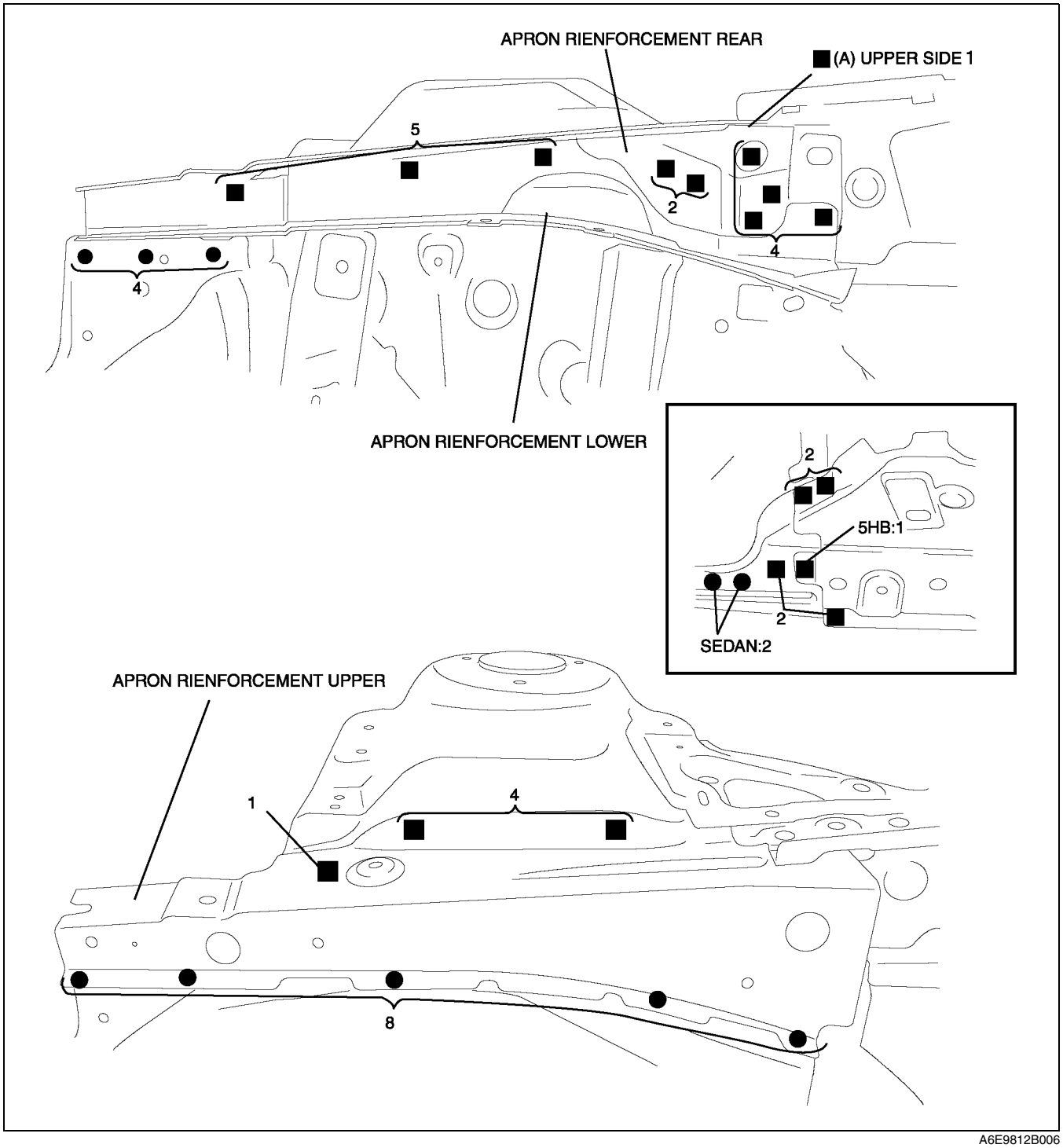

A6E9812B006

WHEEL APRON PANEL ASSEMBLY REMOVAL

A6E981253210B01

1. Drill the 26 weld locations indicated by (A), and 7 weld locations indicated by (B), remove the wheel apron panel assembly.

Note

- If removing the wheel apron panel front and the suspension housing separately as separate parts, drill 7 locations indicated by (B) and drill 6 locations indicated by (C).

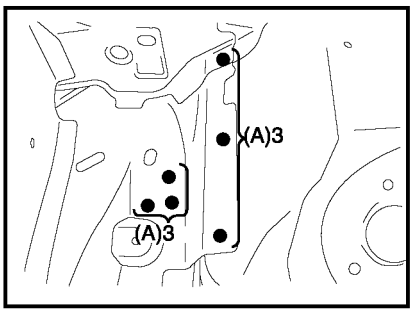

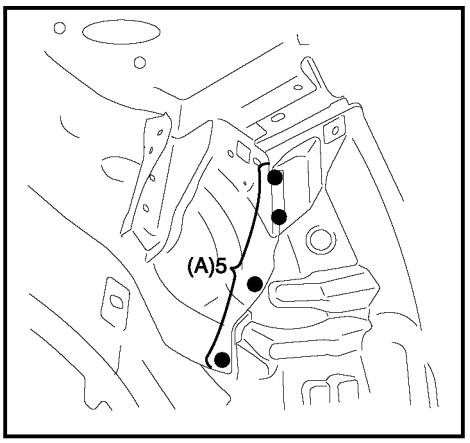

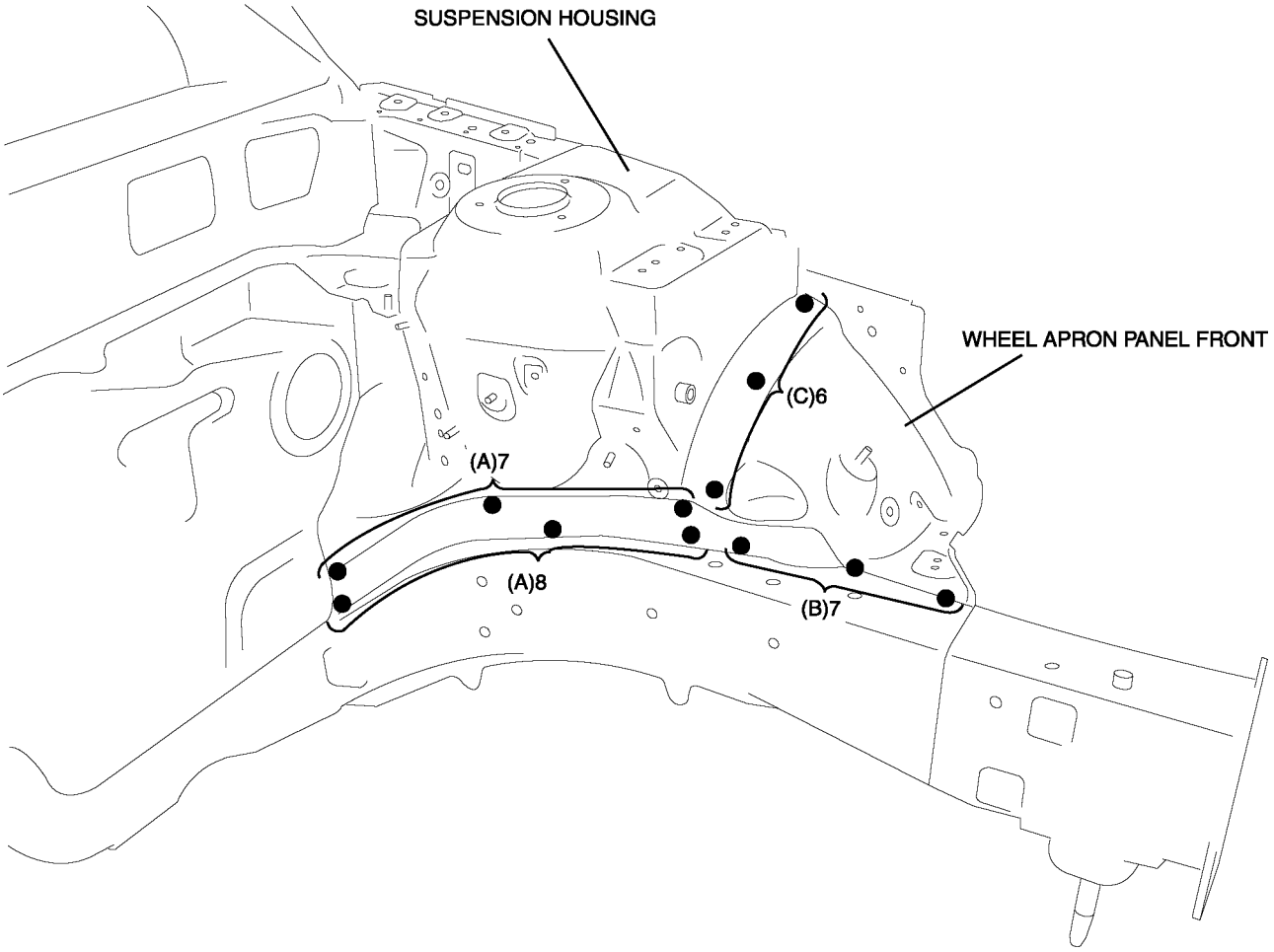

A6E9812B007

WHEEL APRON PANEL ASSEMBLY INSTALLATION

A6E981253210B02

1. When installing new parts, position each part so that the section measurement aligns to the body dimension.
2. Drill holes for plug welds before installing new parts.
3. After trial-fitting new parts, make sure the related parts fit properly.

Note

- When replacing the wheel apron panel front and the suspension housing separately, weld 6 locations indicated by (A).

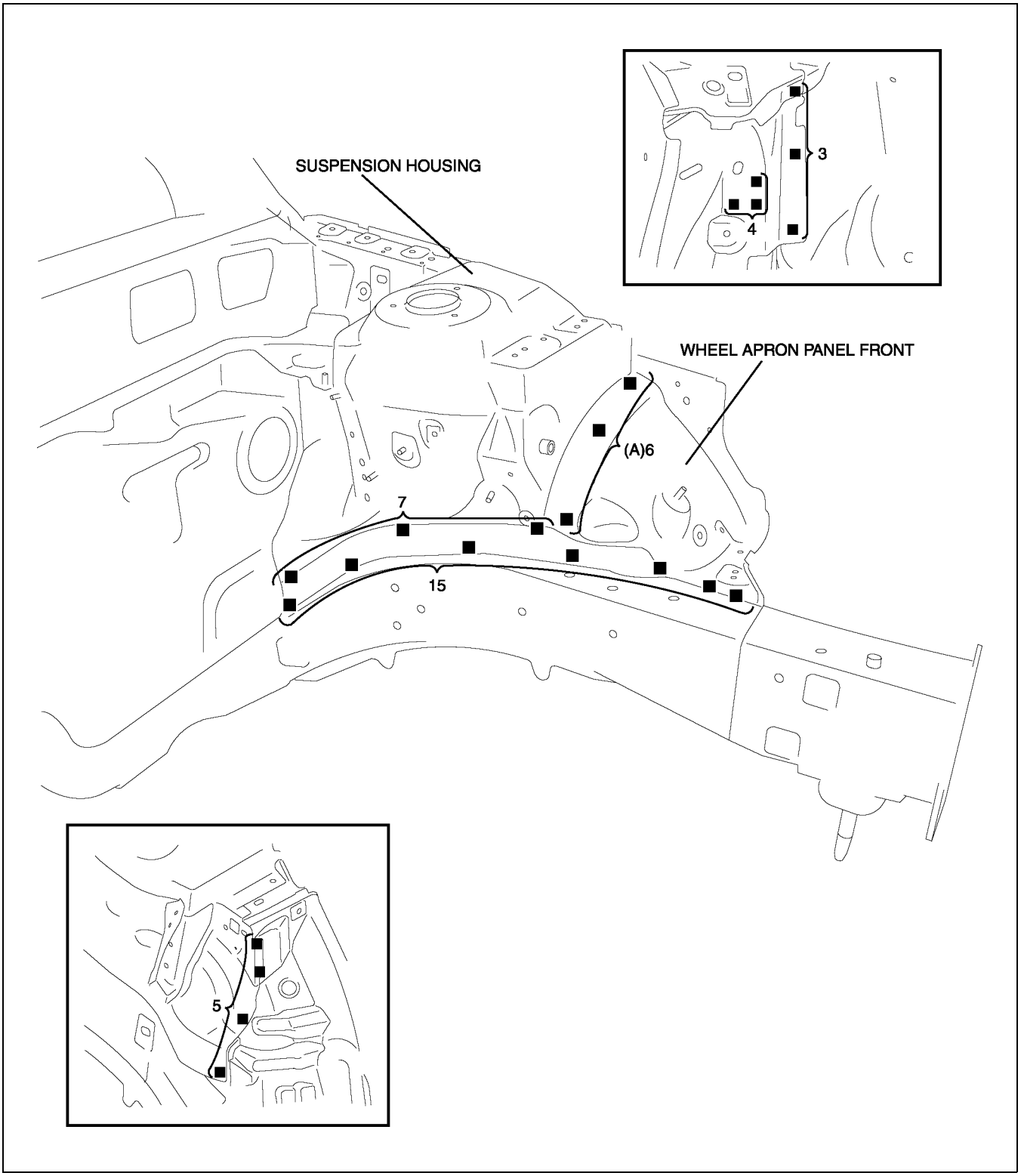

A6E9812B008

FRONT SIDE FRAME REMOVAL

A6E981253300B01

1. Remove the member side.
2. Drill the 1 weld locations indicated by (A), from the room side.
3. Drill the remaining weld locations and remove the front side frame by pulling it.

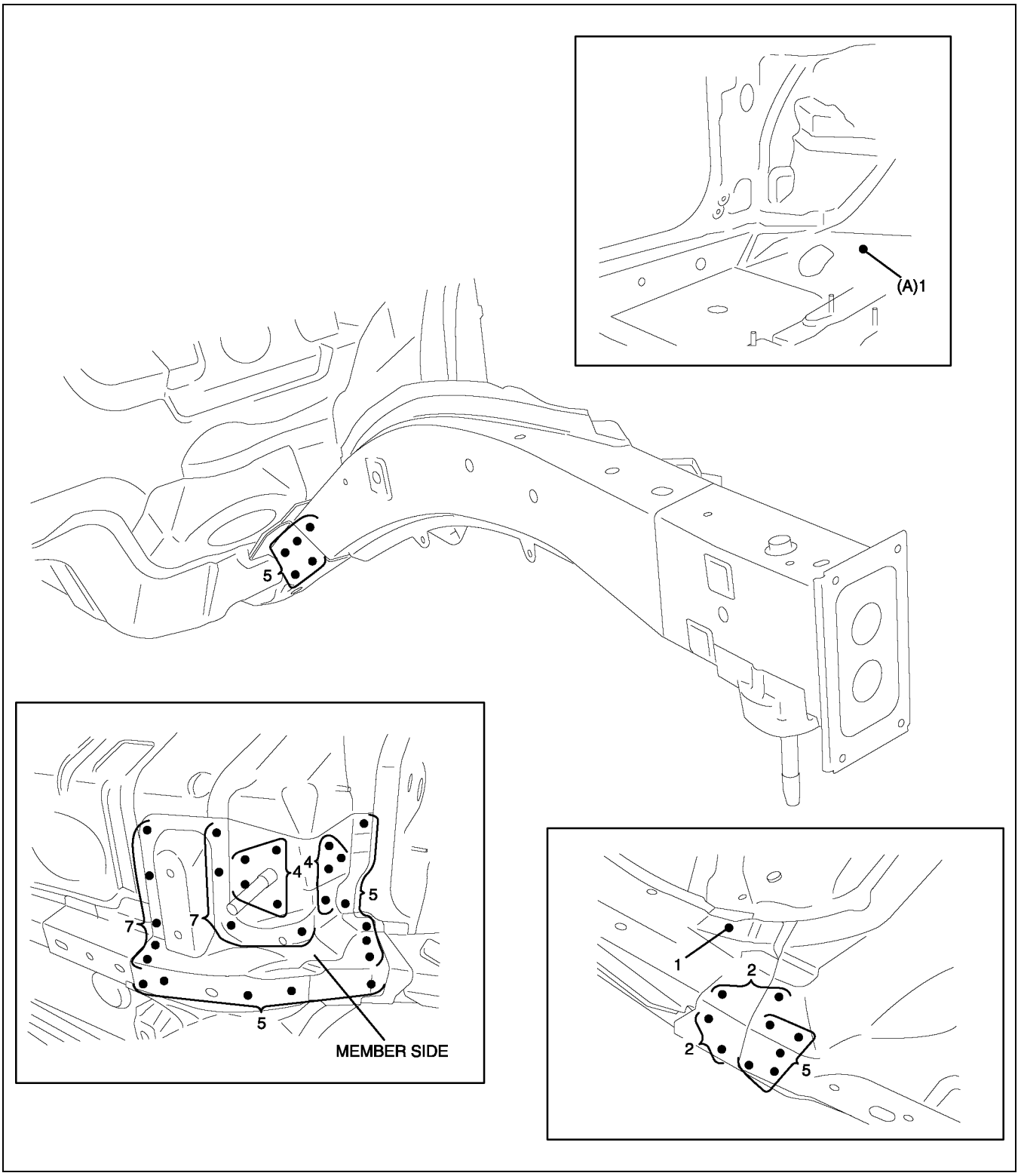

A6E9812B009

FRONT SIDE FRAME INSTALLATION

A6E981253300B02

1. When installing new parts, position each part so that the section measurement aligns to the body dimension.
2. Drill holes for plug welds before installing new parts.
3. After trial-fitting new parts, make sure the related parts fit properly.

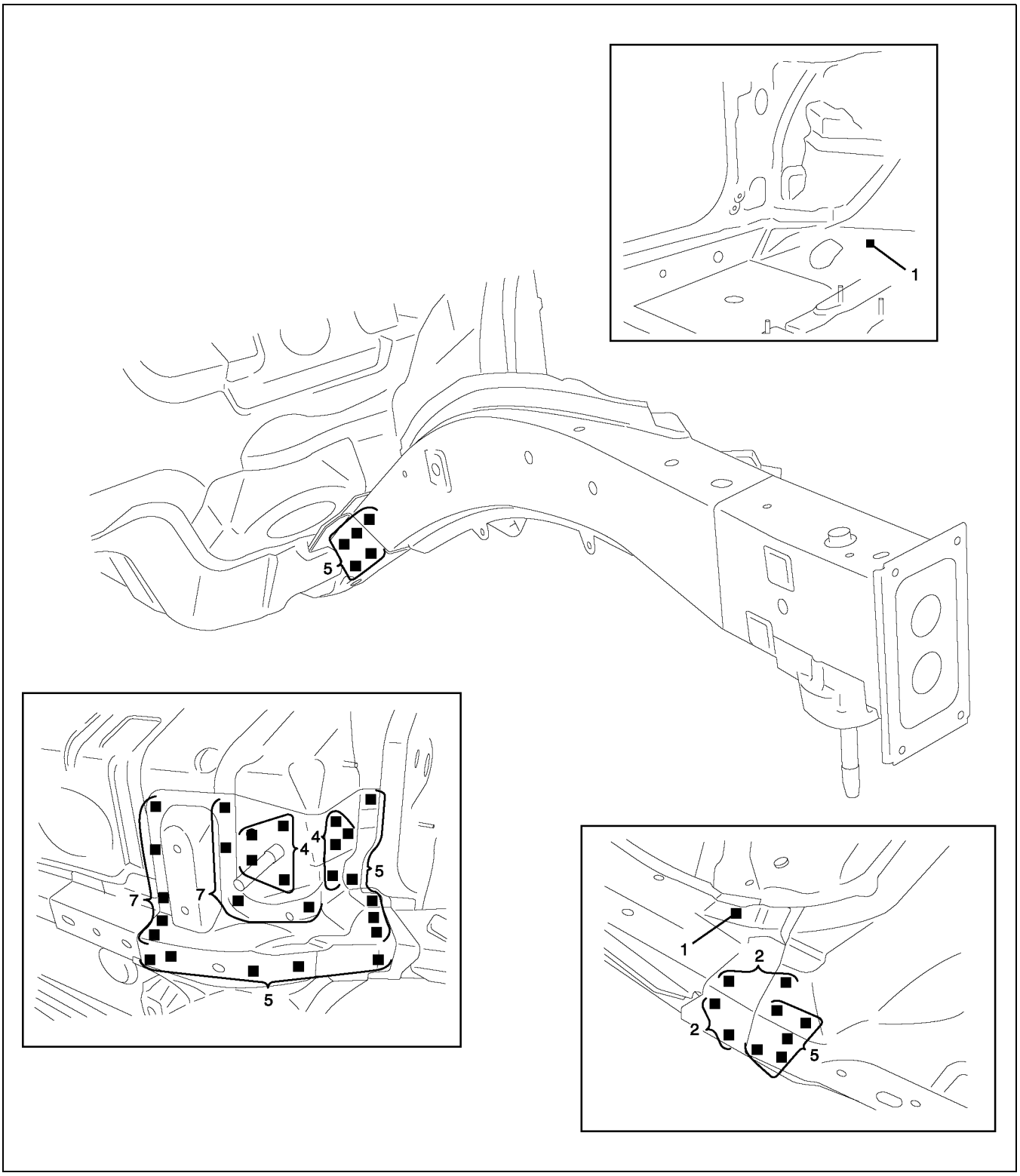

A6E9812B010

FRONT PILLAR REMOVAL

A6E981274090B01

1. Rough cut area (A), drill the 35 weld locations indicated by (B), then remove the lower part of the front pillar outer.
2. Rough cut area (C), drill the 20 weld locations indicated by (D), and 2 weld locations indicated by (E), then remove the front pillar.

Note

- If removing the front pillar reinforcement and the front pillar inner as separate parts, drill 8 locations indicated by (F) and drill 30 locations indicated by (G).

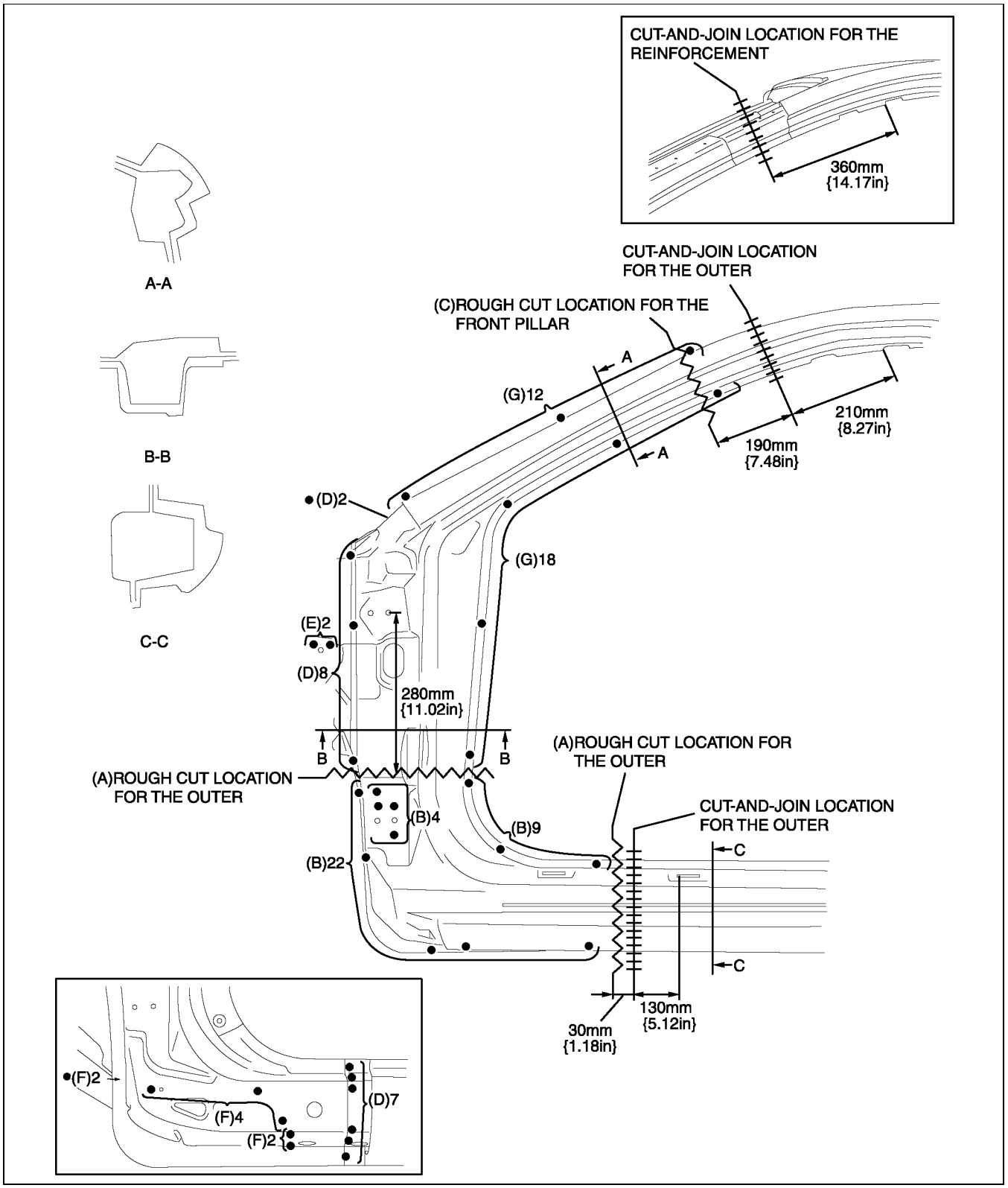

A6E9812B011

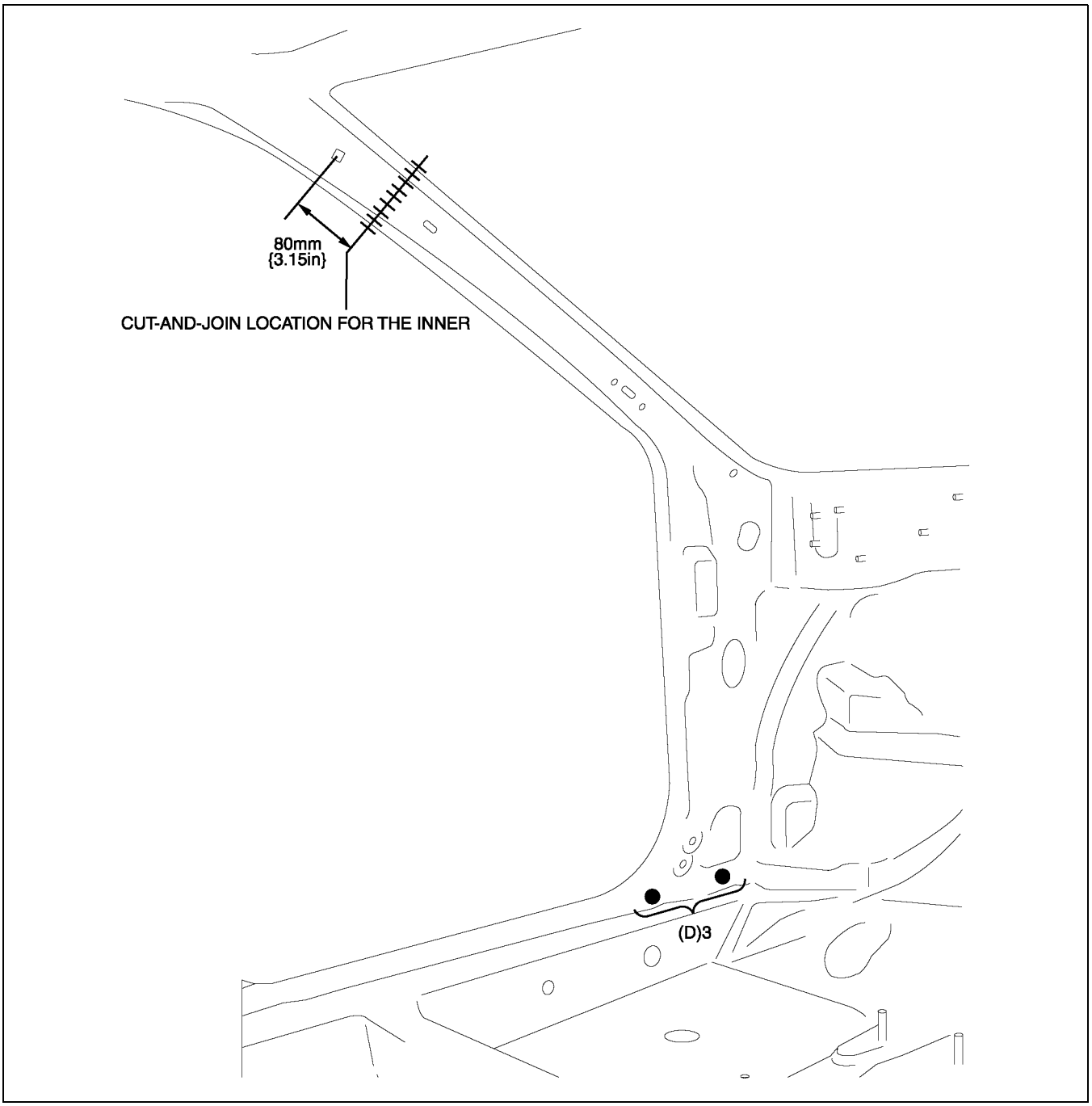

A6E9812B012

FRONT PILLAR INSTALLATION

A6E981274090B02

1. When joining the new and old parts, temporarily install and fit the new part in position, measure each dimension according to the body dimension, then adjust the position to align it to the standard dimensions.
2. Drill holes for plug welds before installing new parts.

Note

- In areas where the outer, reinforcement, inner, etc. are in 3-4 layers, drill holes for plug welds in all but the innermost panel.

3. Weld in 5 locations indicated by (A), then trial-fit the inner and reinforcement.
4. Weld in 10 locations indicated by (B), then install the inner and reinforcement to the existing parts.
5. After trial-fitting new parts, make sure the related parts fit properly.

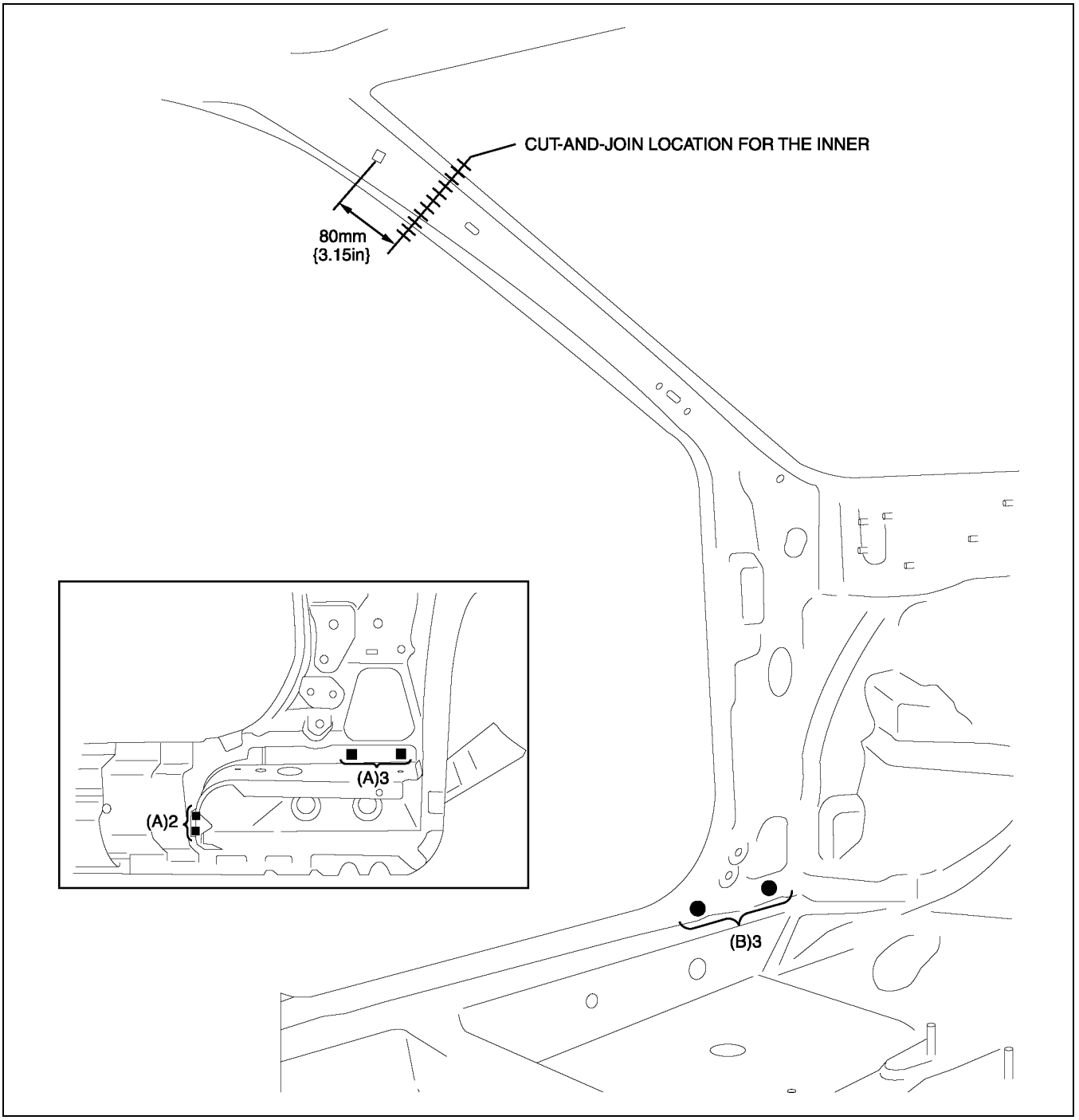

A6E9812B013

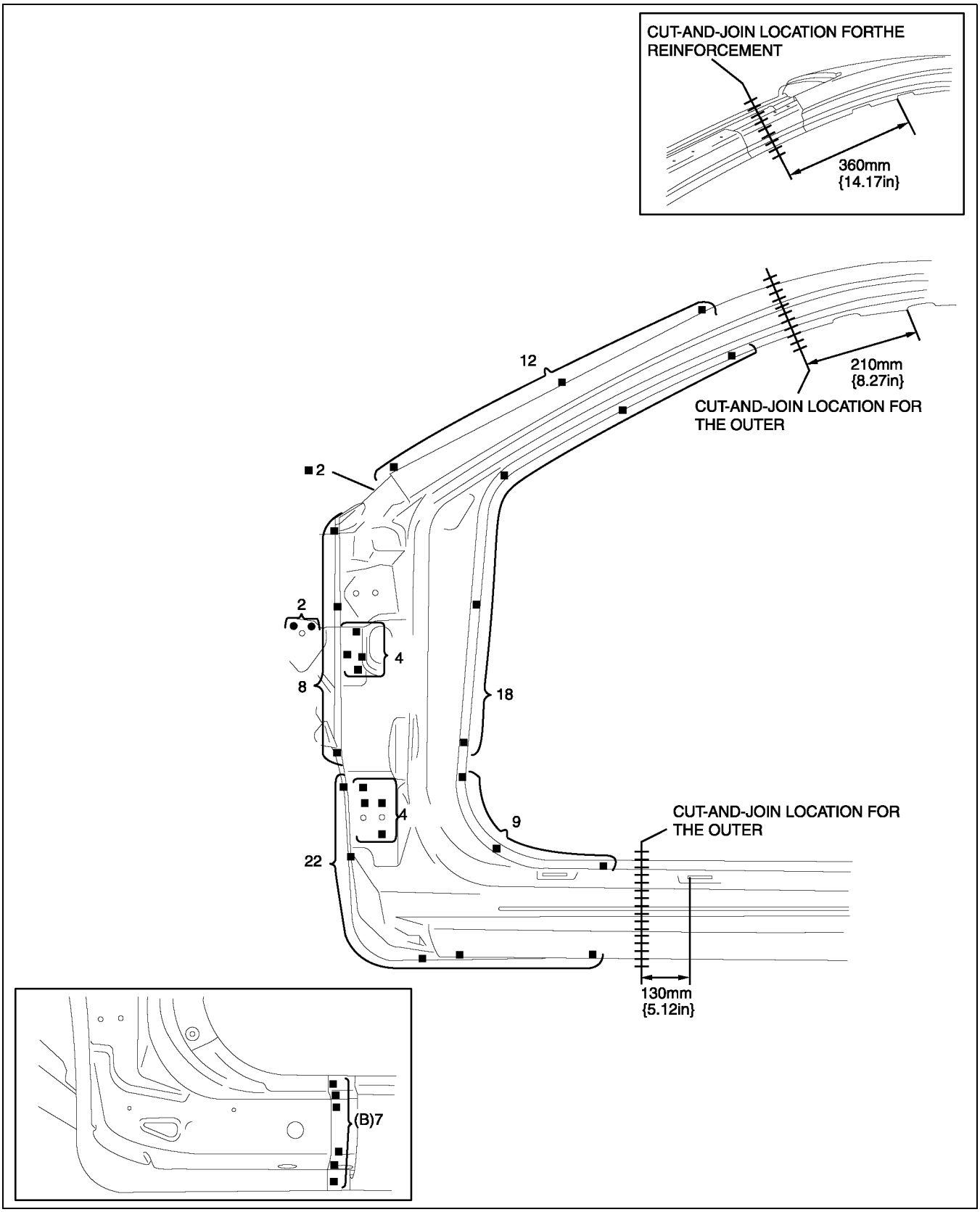

A6E9812B014

CENTER PILLAR REMOVAL

A6E981270350B01

1. Rough cut area (A), drill the 44 weld locations indicated by (B), then remove the lower part of the center pillar outer.
2. Rough cut area (C), drill the 20 weld locations indicated by (D), then remove the center pillar outer.
3. Drill the 2 weld locations indicated by (E) and remove the B-pillar reinforcement.

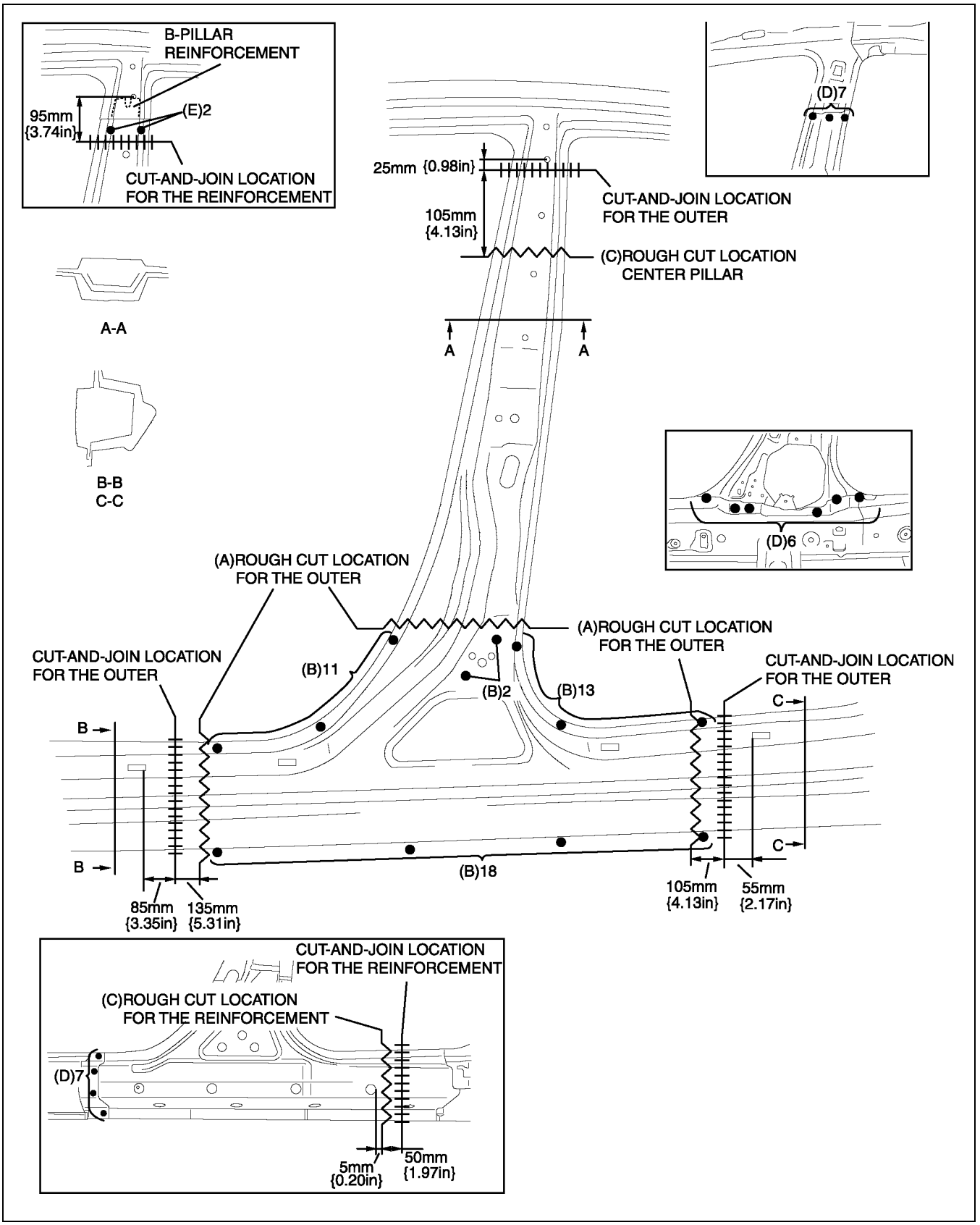

A6E9812B015

CENTER PILLAR INSTALLATION

A6E981270350B02

1. When joining the new and old parts, temporarily install and fit the new part in position, measure each dimension according to the body dimension, then adjust the position to align it to the standard dimensions.
2. Drill holes for plug welds before installing new parts.

Note

- In areas where the outer, reinforcement, inner, etc. are in 3-4 layers, drill holes for plug welds in all but the innermost panel.

Warning

- **When cutting and joining the reinforcement, make sure not to damage or scratch the B-pillar reinforcement.**

3. Install in the following order: inner, reinforcement, and outer.
4. After trial-fitting new parts, make sure the related parts fit properly.

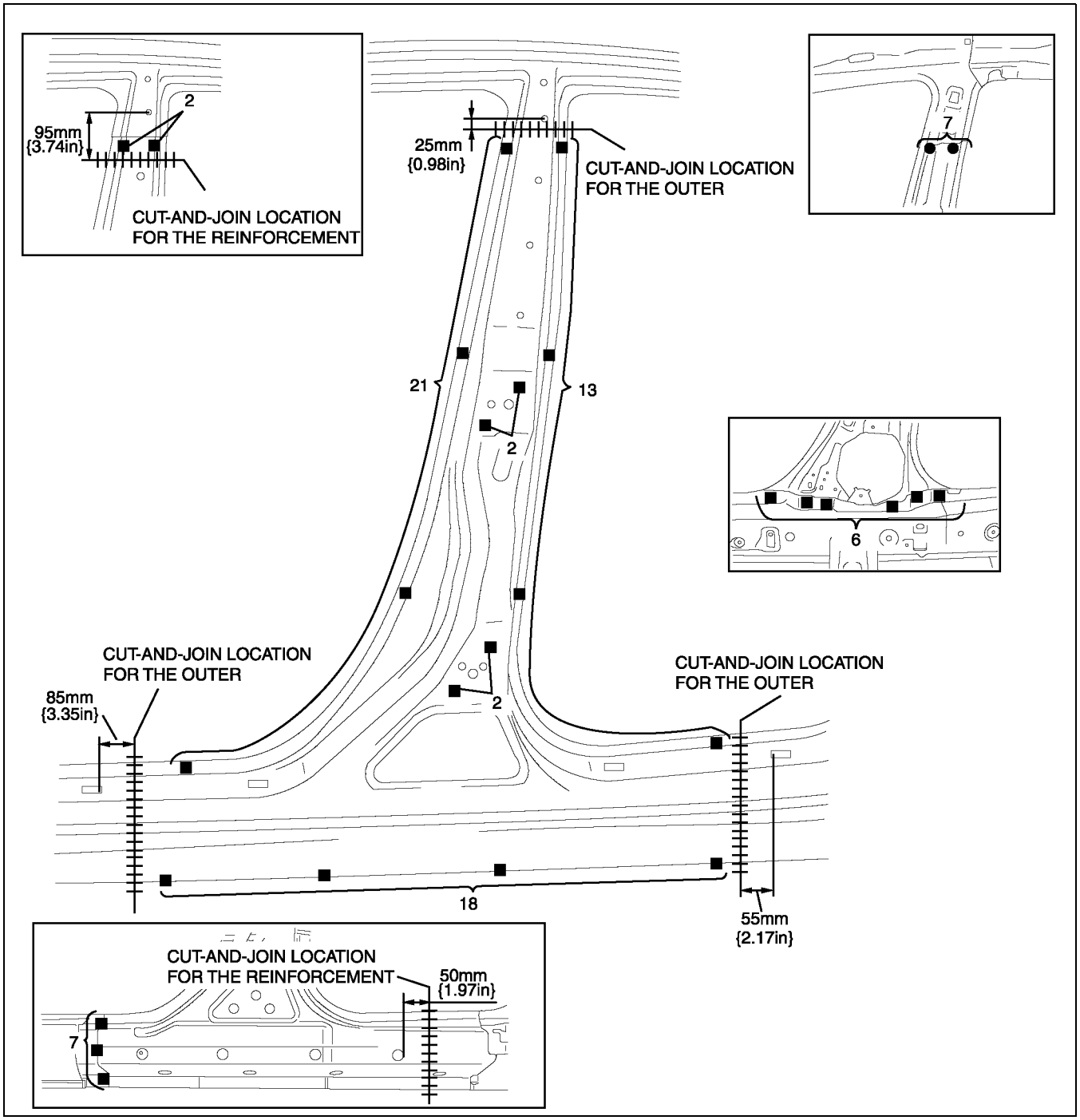

A6E9812B016

REAR FENDER PANEL REMOVAL

A6E981274100B01

SEDAN

Caution

- **Avoid cutting with a blowtorch or similar tools as the insulator (shaded area) is flammable.**

1. The rear fender panel and the rear pillar inner are joined with glue at the wheel arch line. Use a chisel or other to separate the rear fender panel from the rear pillar inner, then remove the rear fender panel.

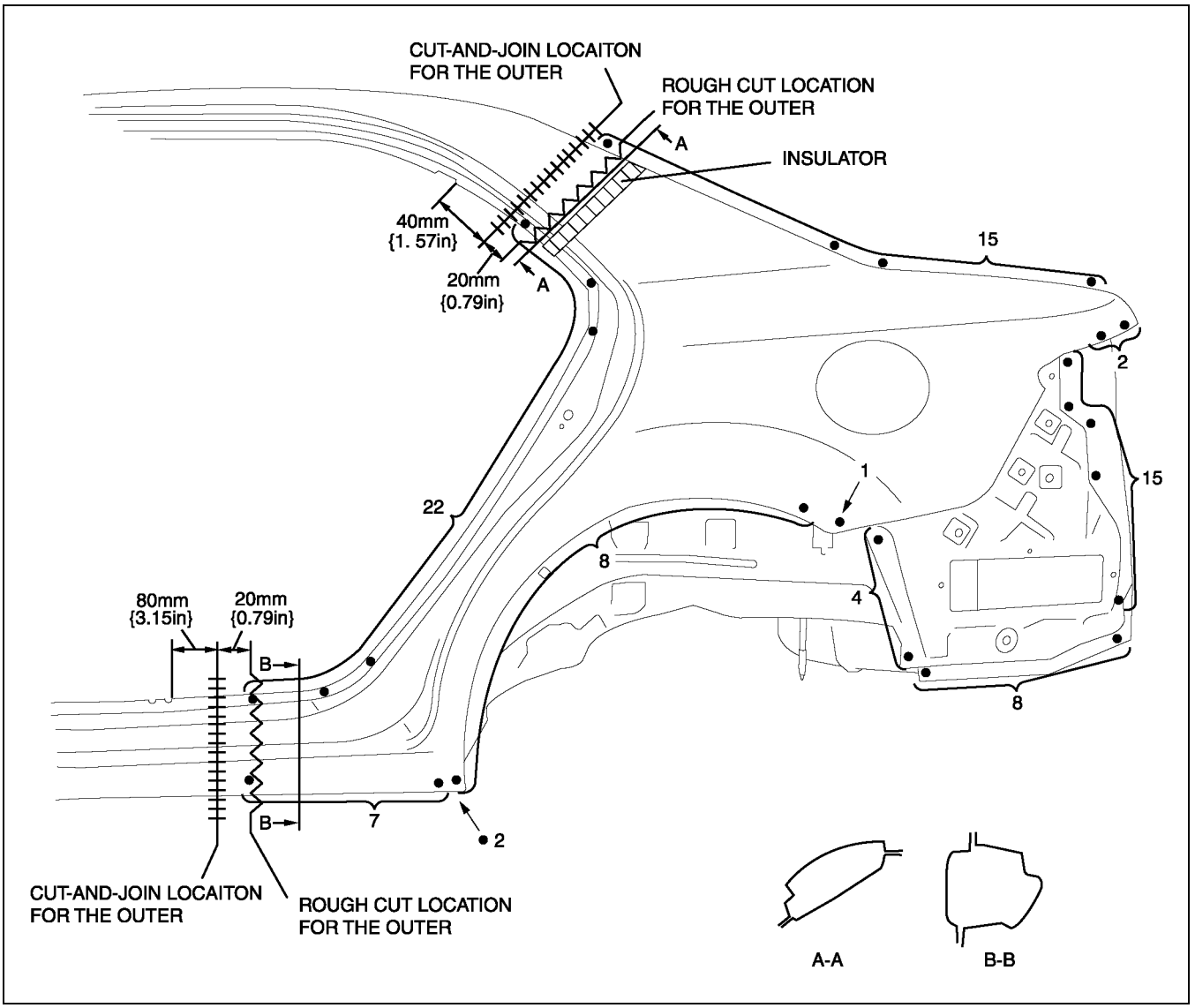

A6E9812B017

5HB

Caution
- **Avoid cutting with a blowtorch or similar tools as the insulator (shaded area) is flammable.**

1. The rear fender panel and the rear pillar inner are joined with glue at the wheel arch line. Use a chisel or other to separate the rear fender panel from the rear pillar inner, then remove the rear fender panel.

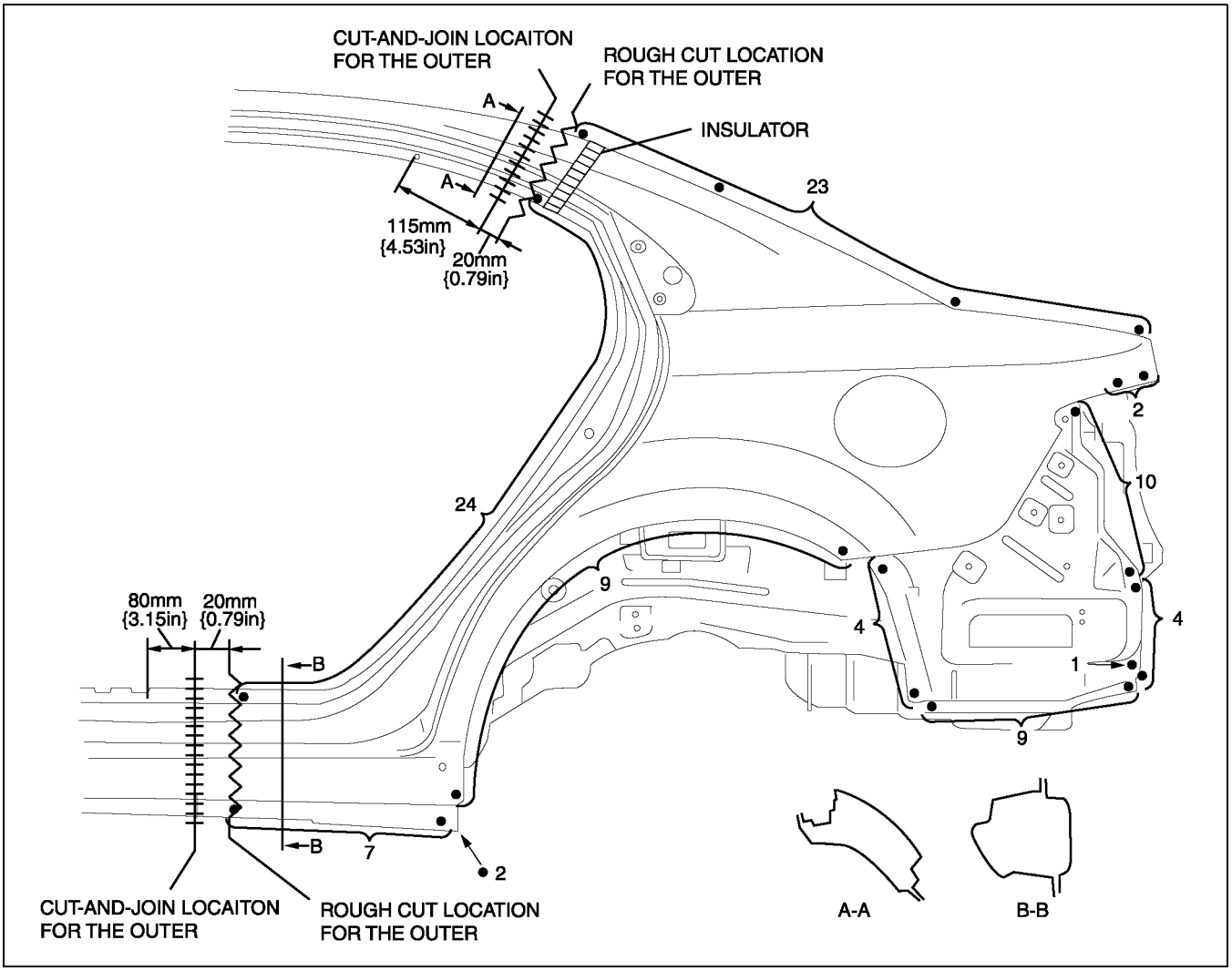

A6E9812B018

REAR FENDER PANEL INSTALLATION

A6E981274100B02

SEDAN

1. When joining the new and old parts, temporarily install and fit the new part in position, measure each dimension according to the body dimension, then adjust the position to align it to the standard dimensions.
2. Drill holes for plug welds before installing new parts.
3. Before installing new parts, apply spot weld sealer to the wheel arch line.
4. After trial-fitting new parts, make sure the related parts fit properly.

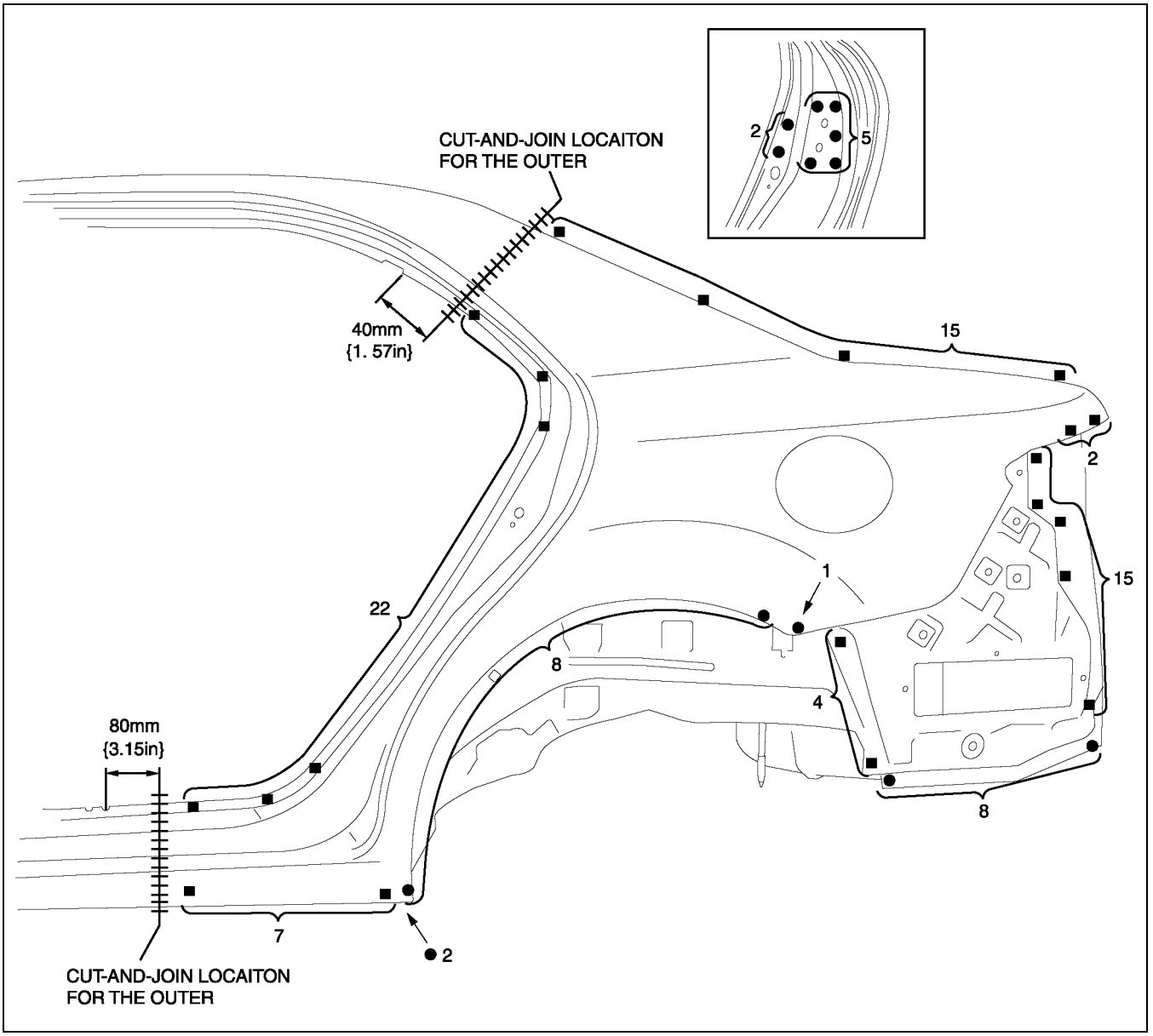

A6E9812B019

5HB

1. When joining the new and old parts, temporarily install and fit the new part in position, measure each dimension according to the body dimension, then adjust the position to align it to the standard dimensions.
2. Drill holes for plug welds before installing new parts.
3. Before installing new parts, apply spot weld sealer to the wheel arch line.
4. After trial-fitting new parts, make sure the related parts fit properly.

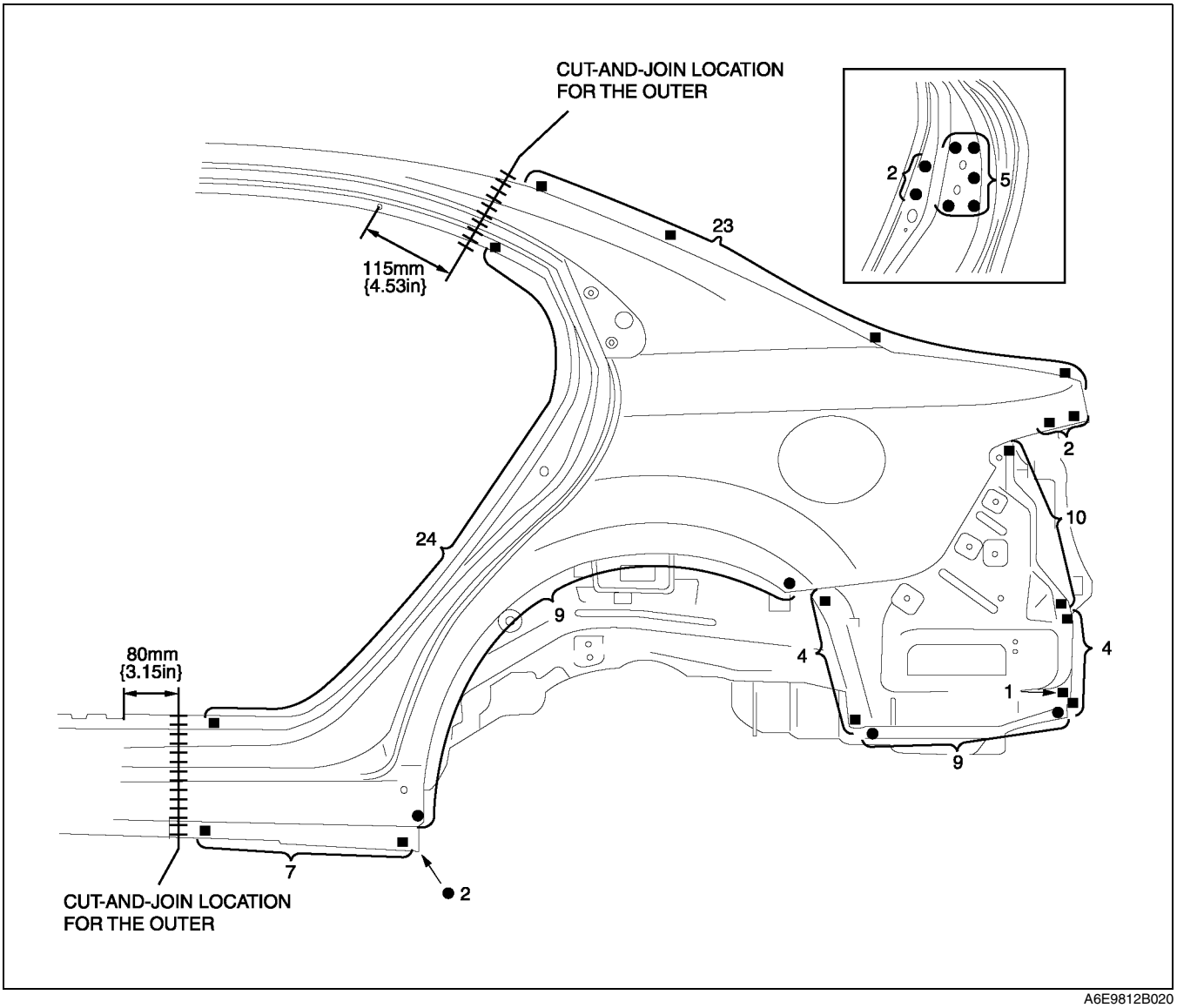

A6E9812B020

SIDE SILL PANEL REMOVAL

A6E981270270B01

1. Remove the side sill panel.
2. Drill the 3 weld locations indicated by (A), from the room side.
3. Remove the side sill reinforcement.

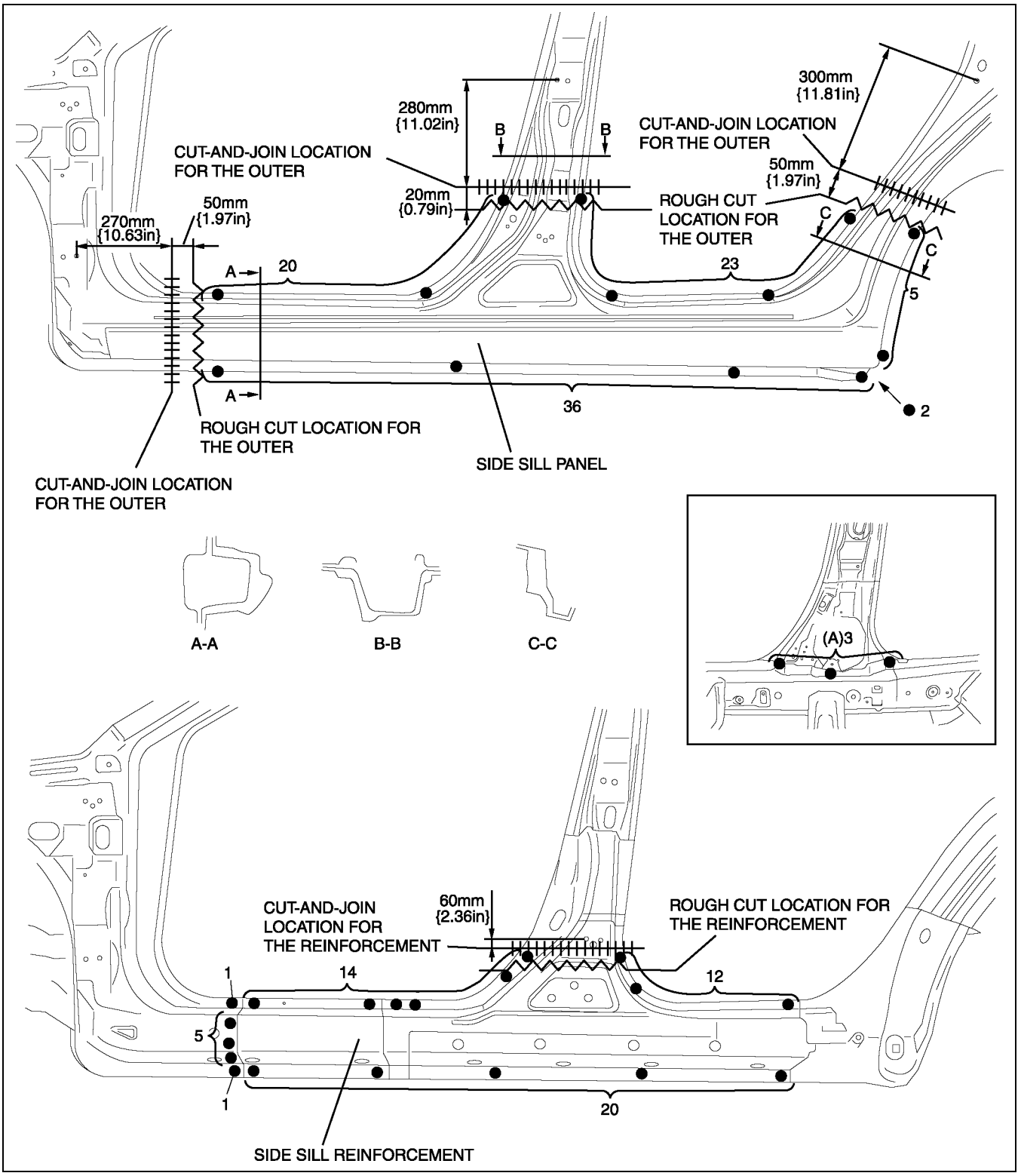

A6E9812B021

SIDE SILL PANEL INSTALLATION

A6E981270270B02

1. When joining the new and old parts, temporarily install and fit the new part in position, measure each dimension according to the body dimension, then adjust the position to align it to the standard dimensions.
2. Drill holes for plug welds before installing new parts.
3. Plug welding of 59 weld locations indicated by (A), during installation of the side sill panel.
4. After trial-fitting new parts, make sure the related parts fit properly.

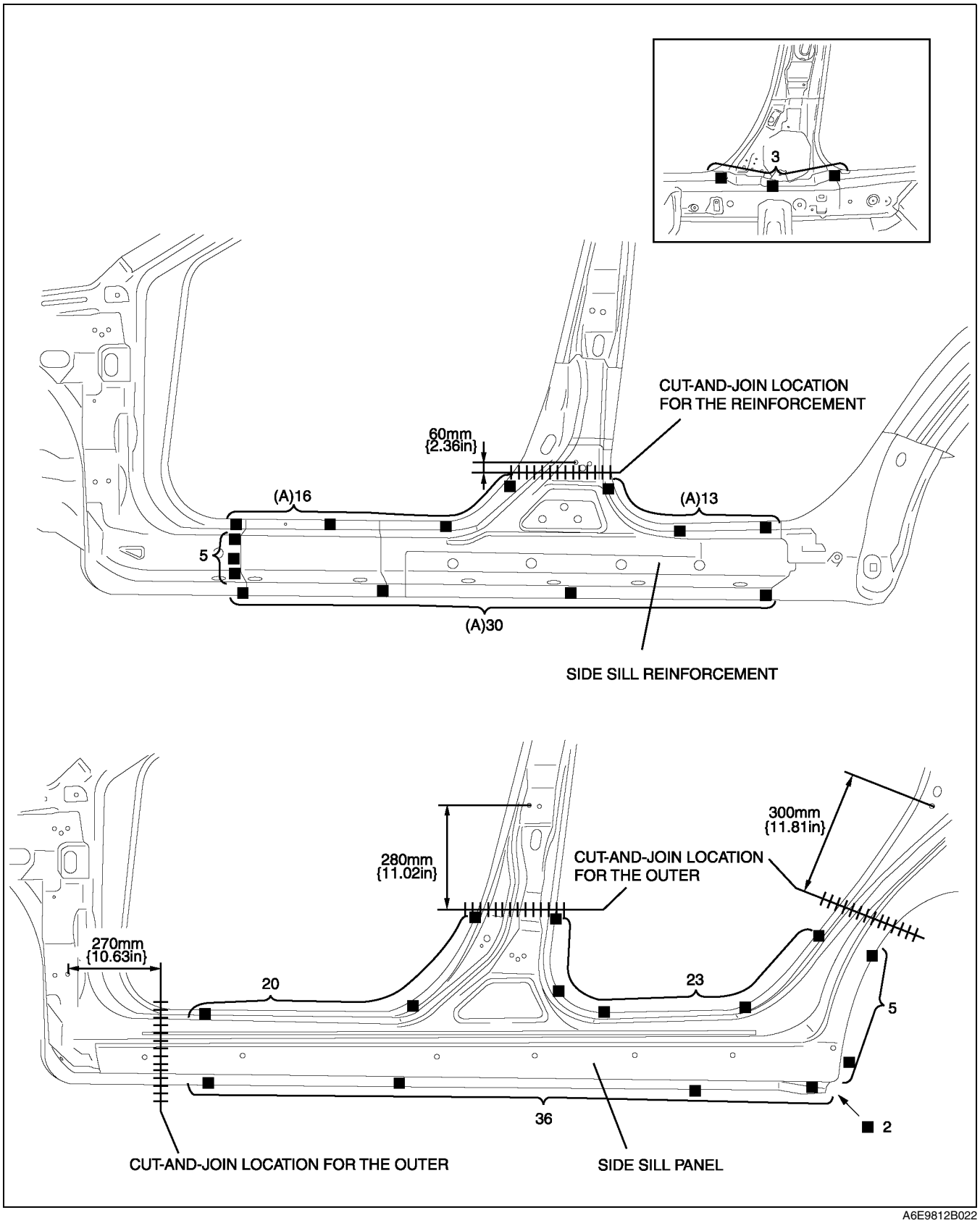

A6E9812B022

REAR END PANEL REMOVAL

A6E981270750B01

SEDAN

1. Remove the rear end panel.

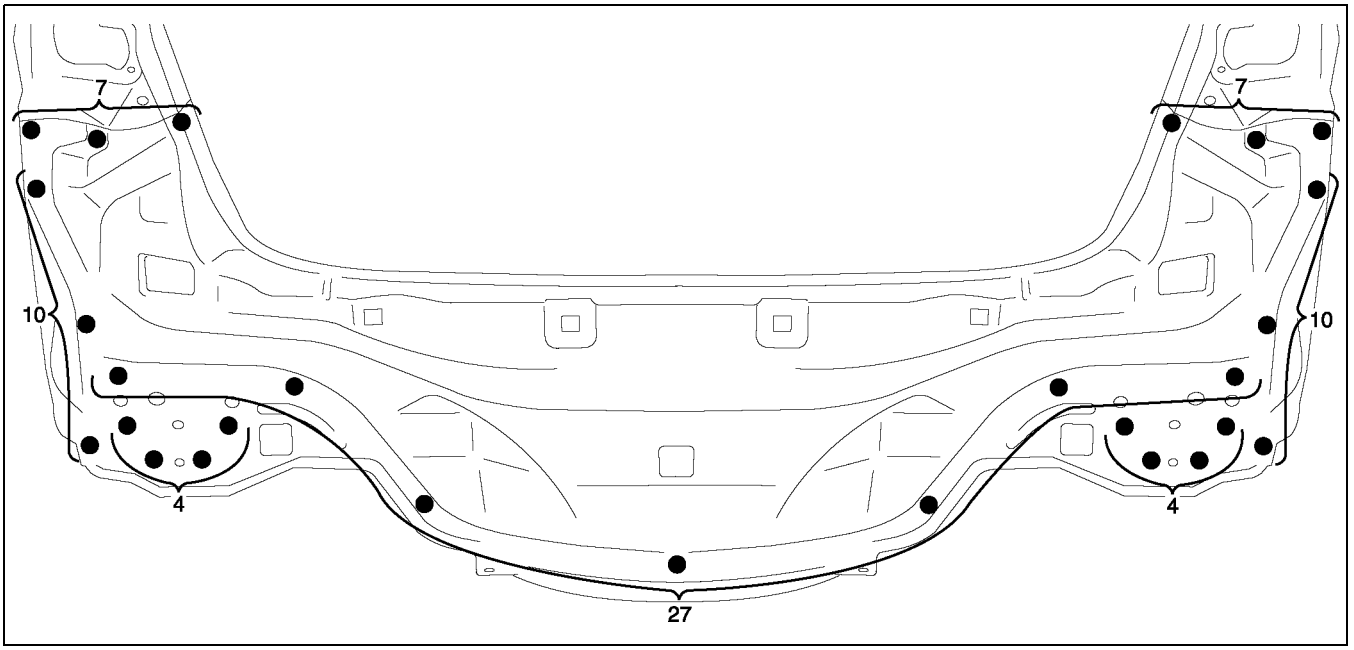

A6E9812B023

5HB

1. Drill the 2 weld locations indicated by (A), from the room side.
2. Remove the rear end panel.

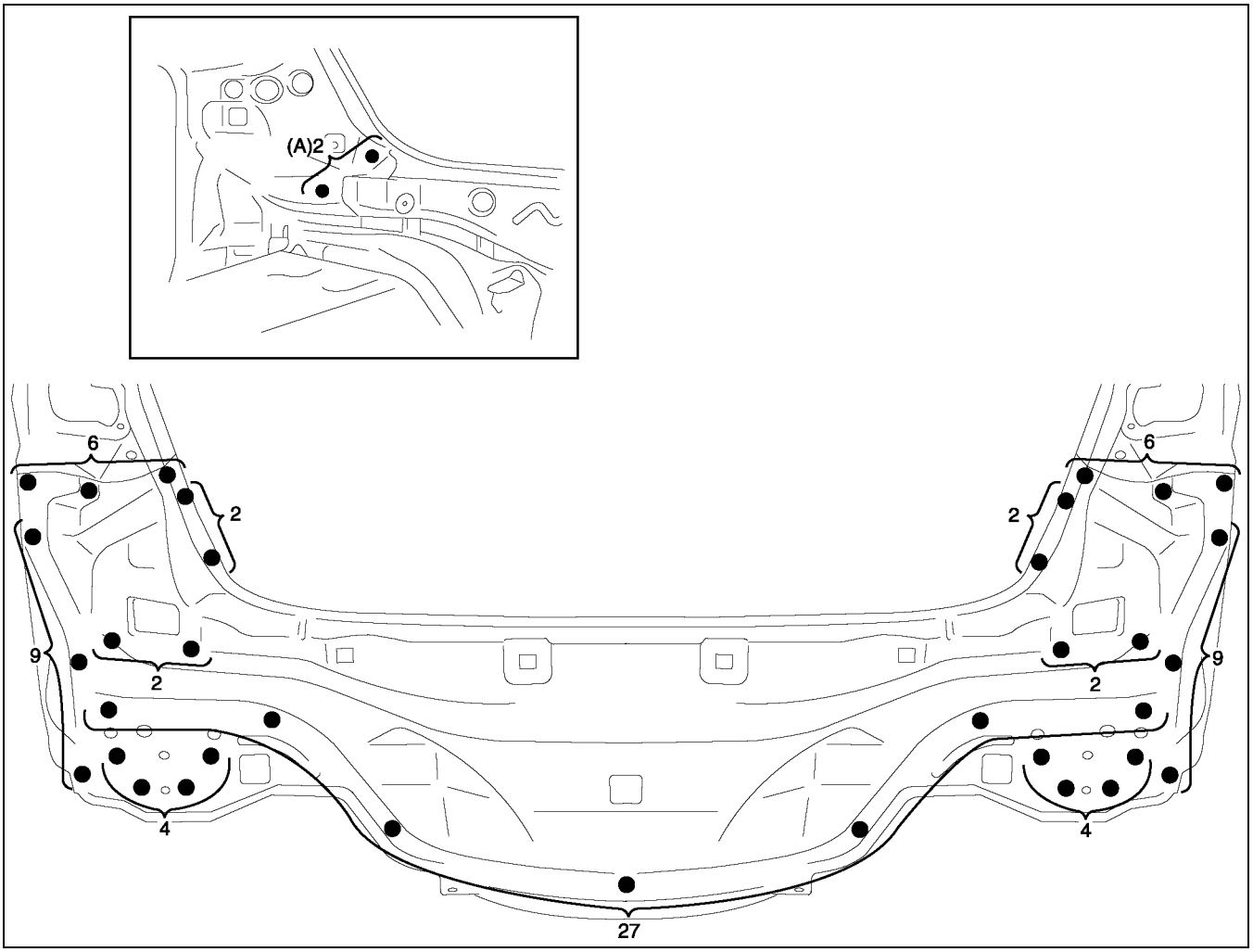

A6E9812B025

REAR END PANEL INSTALLATION

A6E981270750B02

SEDAN

1. When installing new parts, position each part so that the section measurement aligns to the body dimension.
2. Drill holes for plug welds before installing new parts.
3. After trial-fitting new parts, make sure the related parts fit properly.

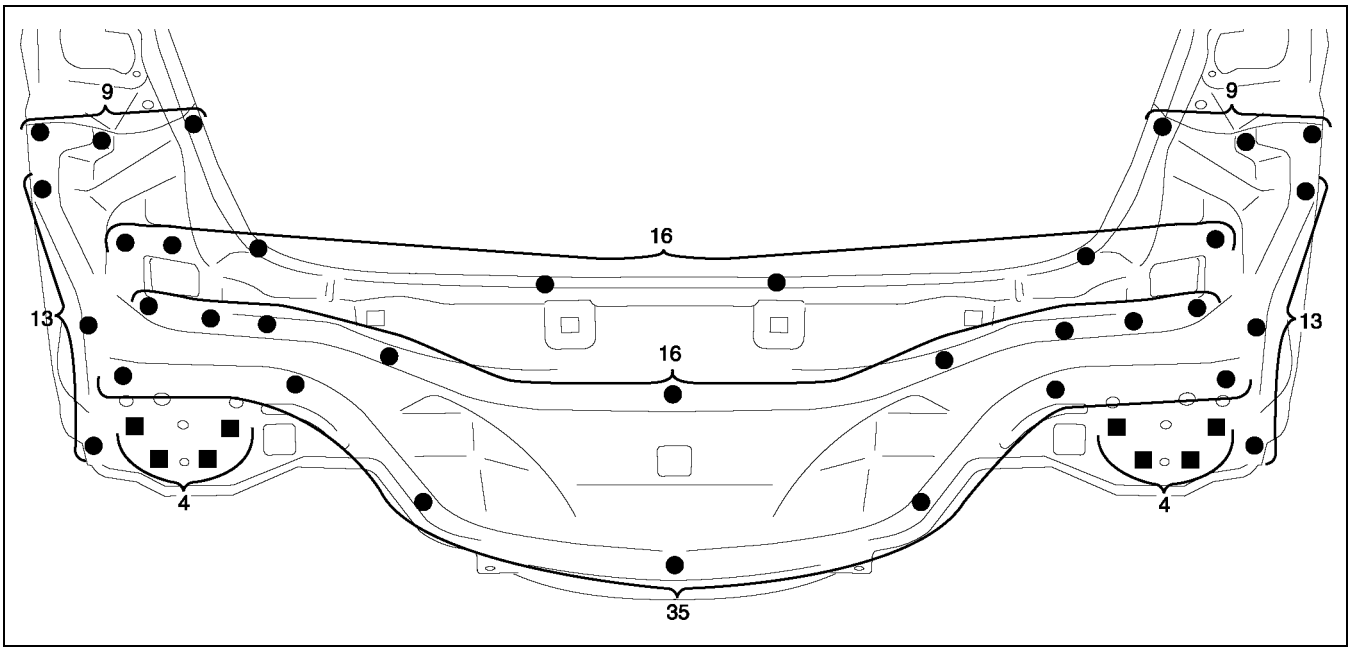

A6E9812B024

5HB

1. When installing new parts, position each part so that the section measurement aligns to the body dimension.
2. Drill holes for plug welds before installing new parts.
3. After trial-fitting new parts, make sure the related parts fit properly.

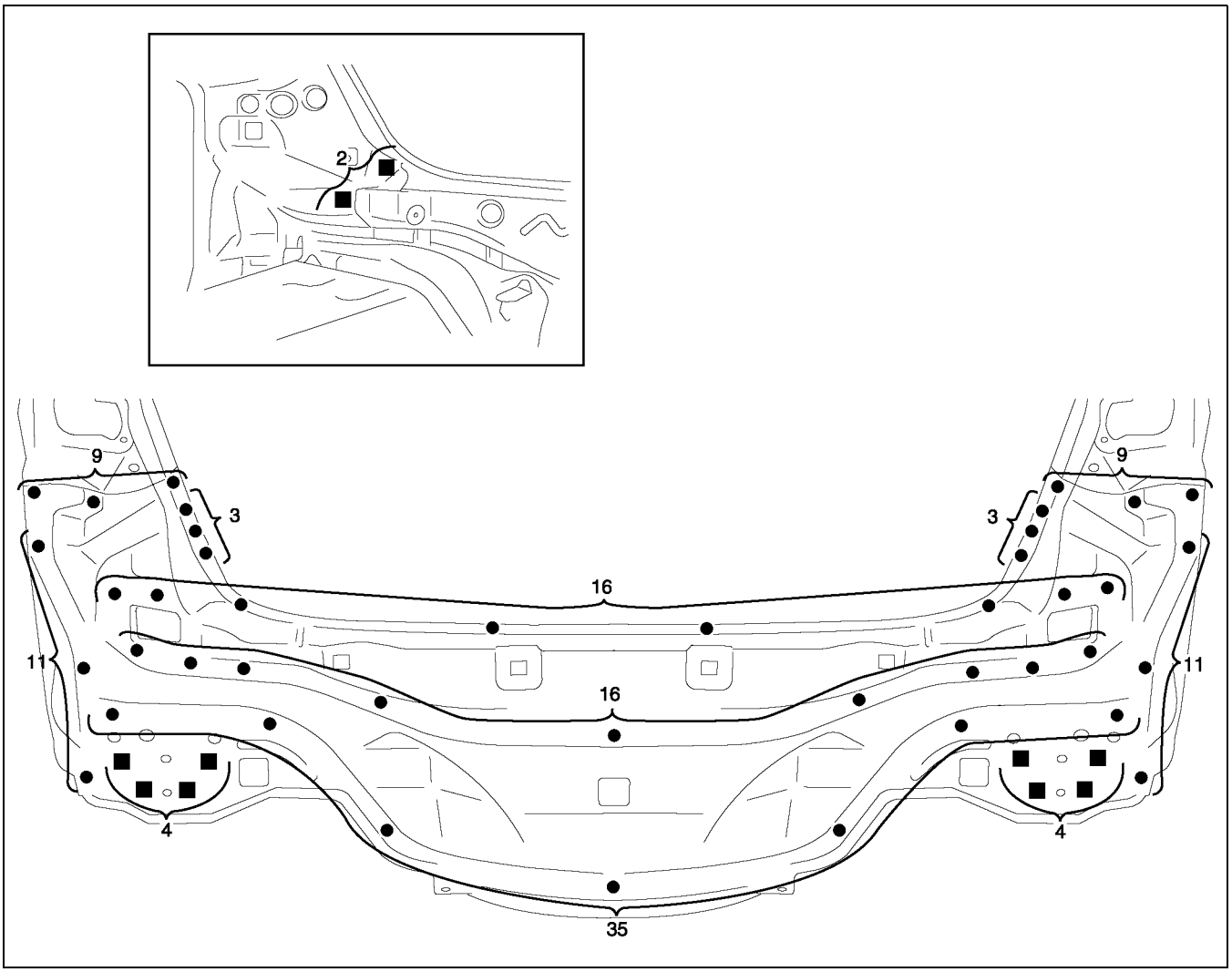

A6E9812B026

REAR FENDER RAIN RAIL AND CORNER PLATE REMOVAL

A6E981270440B01

SEDAN

1. Remove the rear fender rein rail and corner plate.

Note

- When removing the rear fender rain rail and the corner plate separately, drill 3 locations indicated by (A).

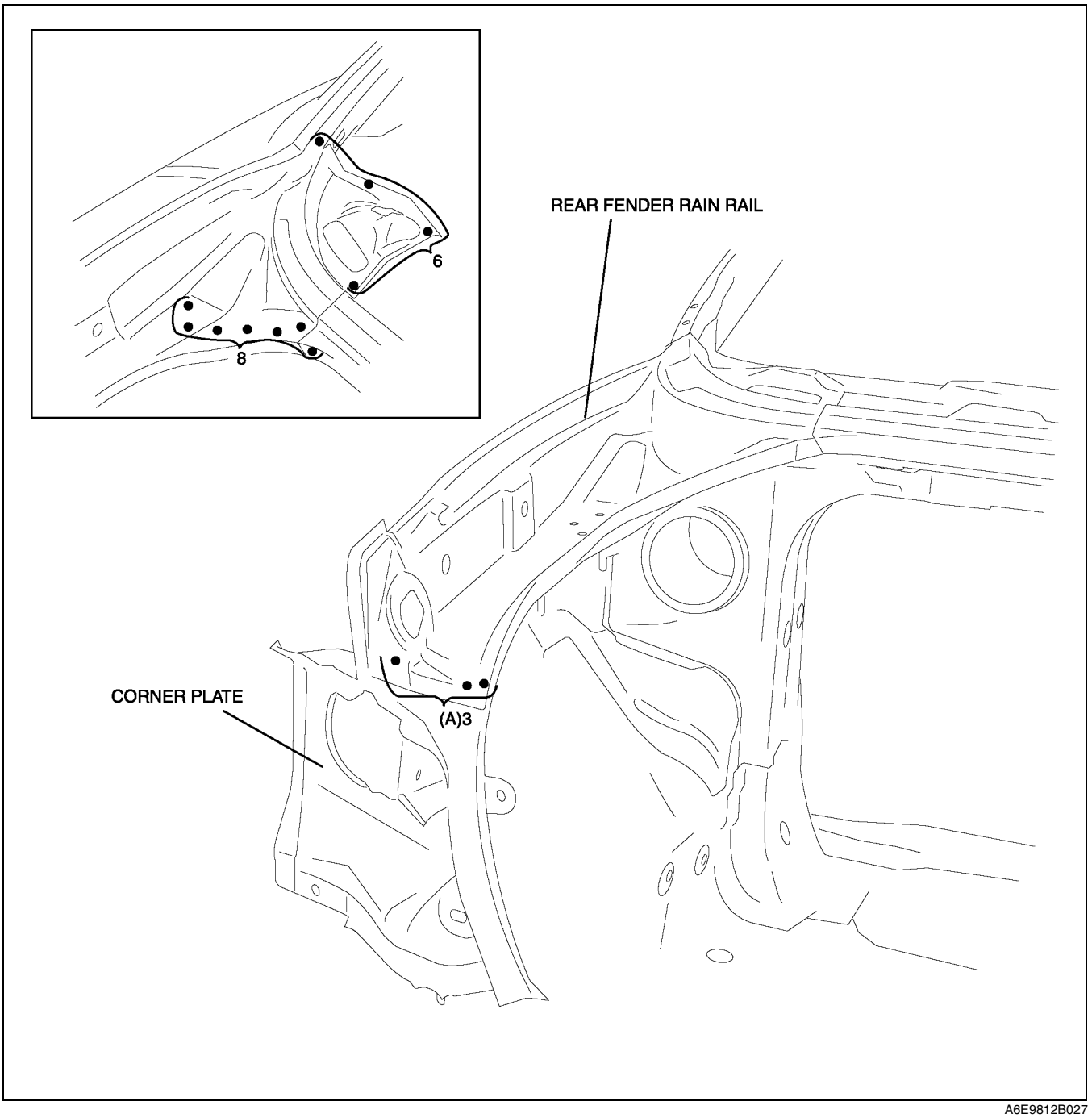

A6E9812B027

5HB

1. Remove the rear fender rain rail and corner plate.

Note

- When removing the rear fender rain rail and the corner plate separately, drill 2 locations indicated by (A).

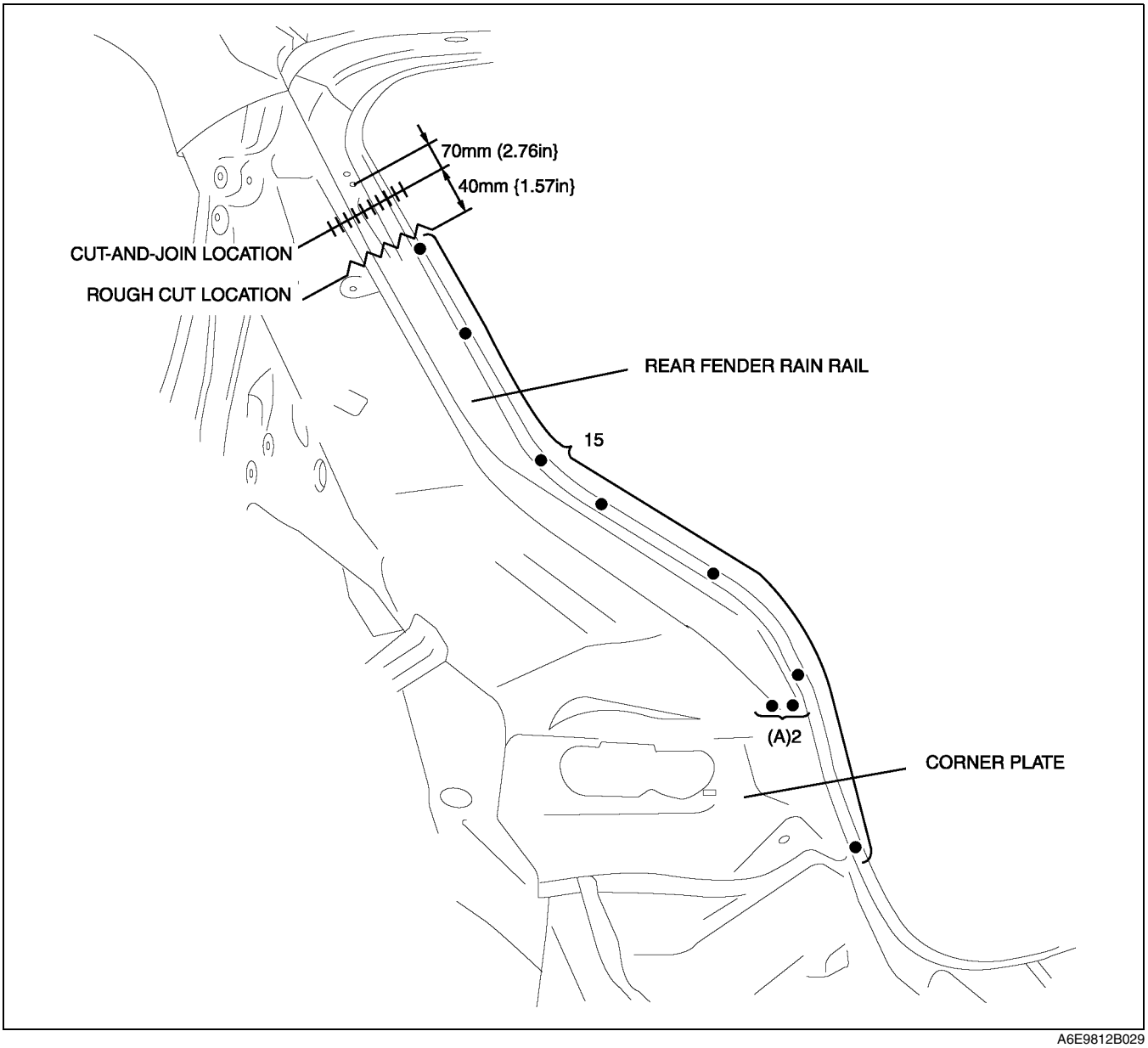

A6E9812B029

REAR FENDER RAIN RAIL AND CORNER PLATE INSTALLATION

A6E981270440B02

SEDAN

1. When installing new parts, position each part so that the section measurement aligns to the body dimension.
2. Drill holes for plug welds before installing new parts.
3. After trial-fitting new parts, make sure the related parts fit properly.

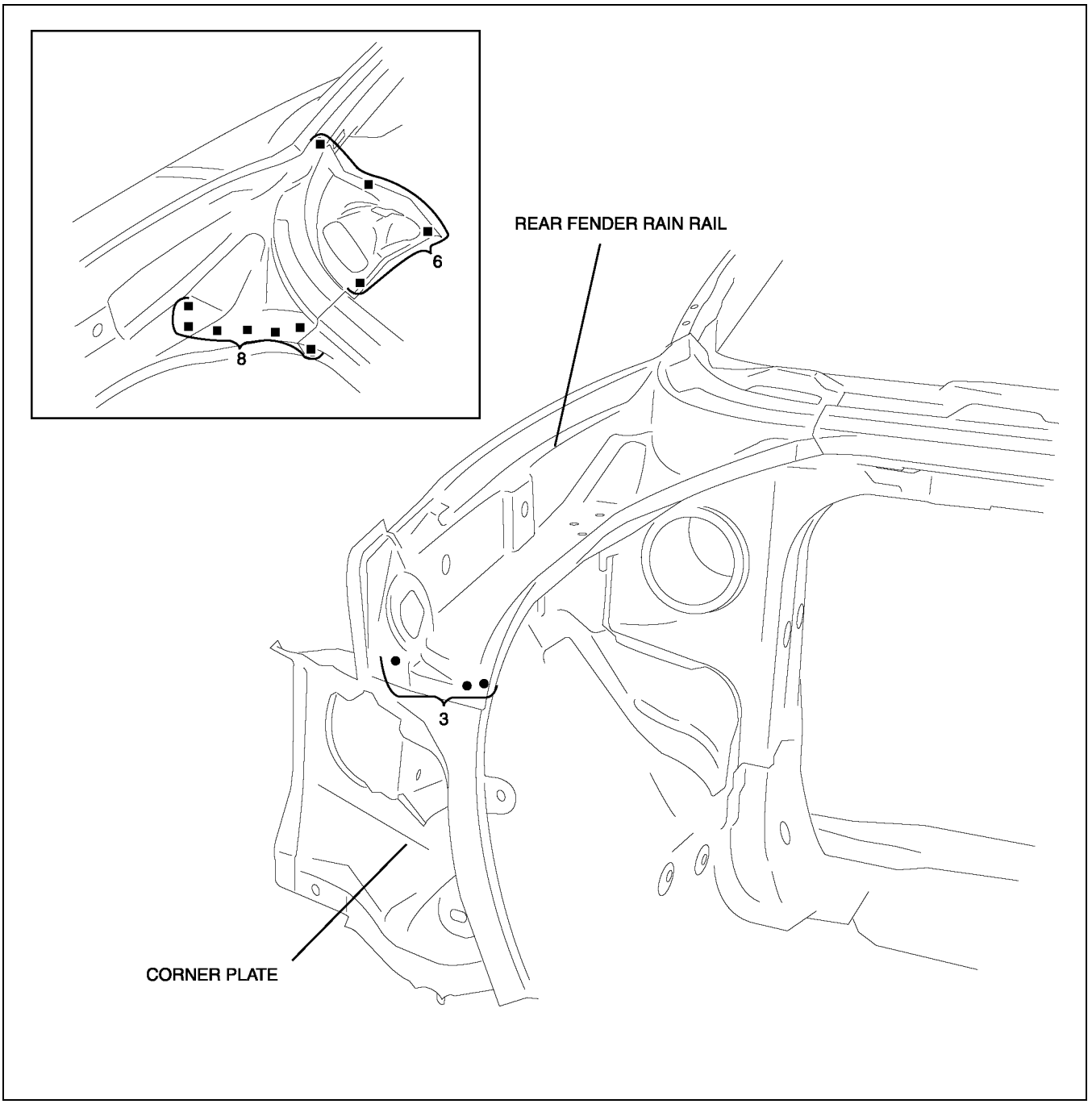

A6E9812B028

5HB

1. When joining the new and old parts, temporarily install and fit the new part in position, measure each dimension according to the body dimension, then adjust the position to align it to the standard dimensions.
2. After trial-fitting new parts, make sure the related parts fit properly.

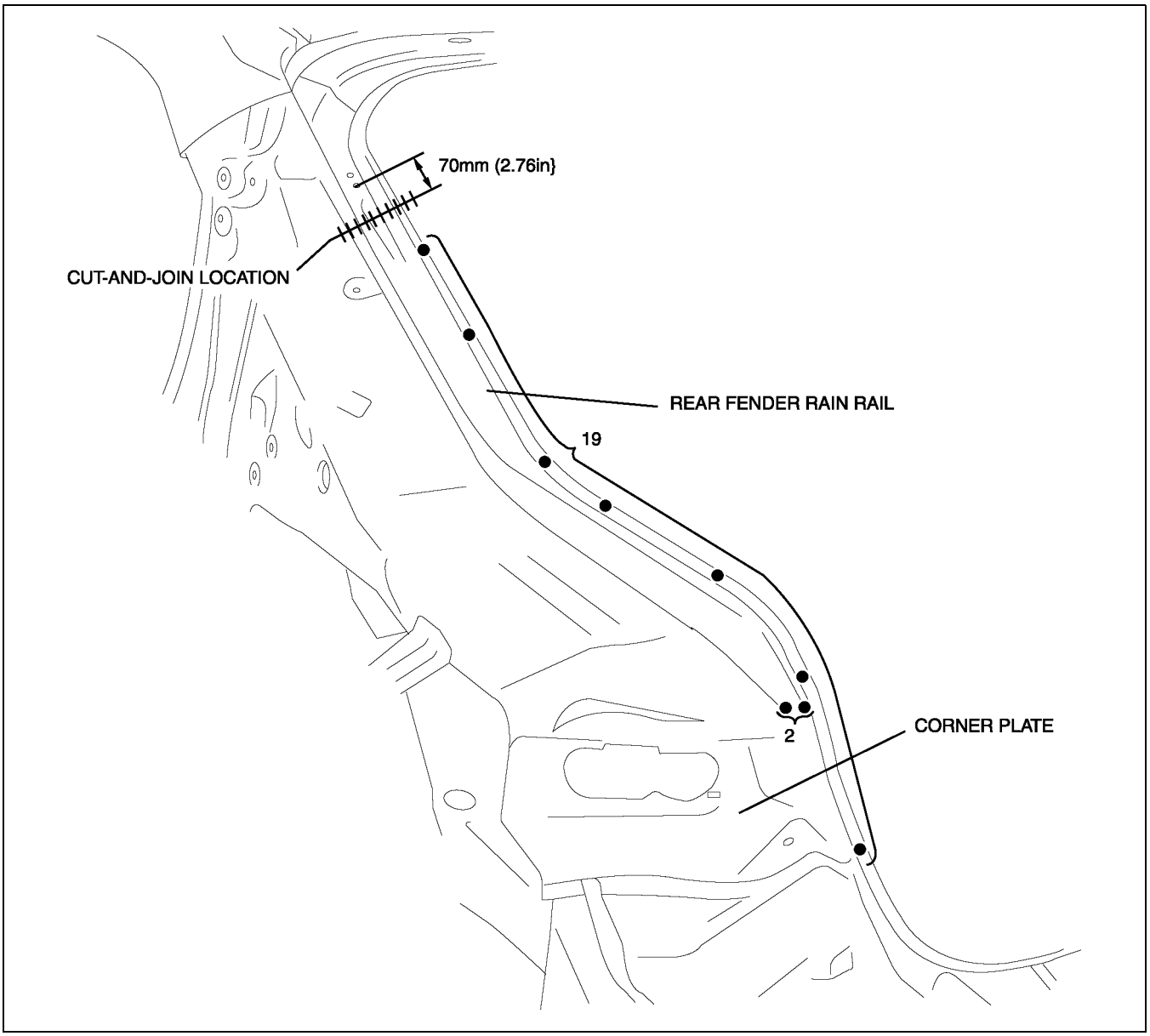

A6E9812B030

REAR FLOOR PAN REMOVAL

A6E981253750B01

1. Remove the rear floor pan.

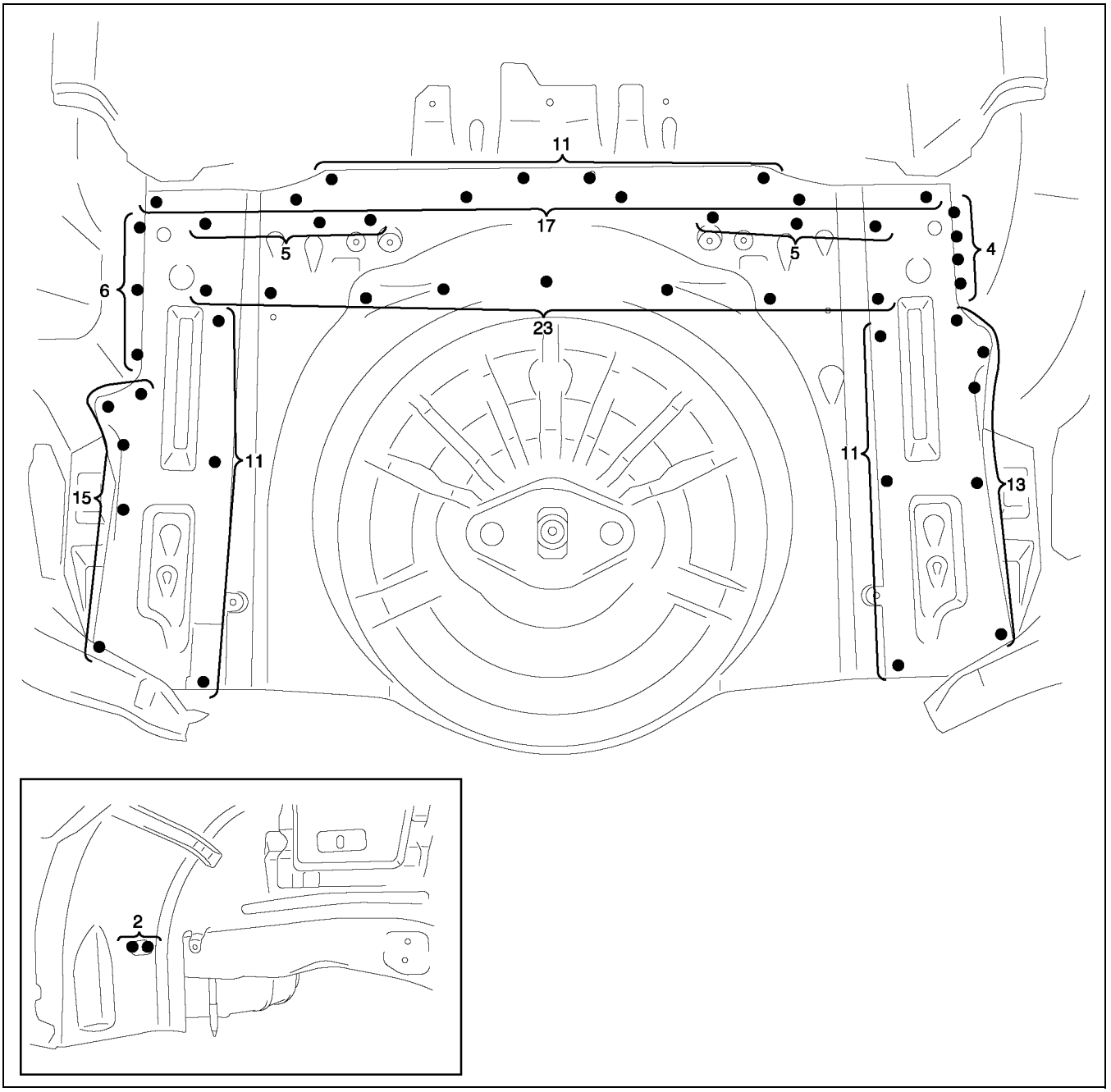

A6E9812B035

REAR FLOOR PAN INSTALLATION

A6E981253750B02

1. Drill holes for plug welds before installing new parts.
2. After trial-fitting new parts, make sure the related parts fit properly.

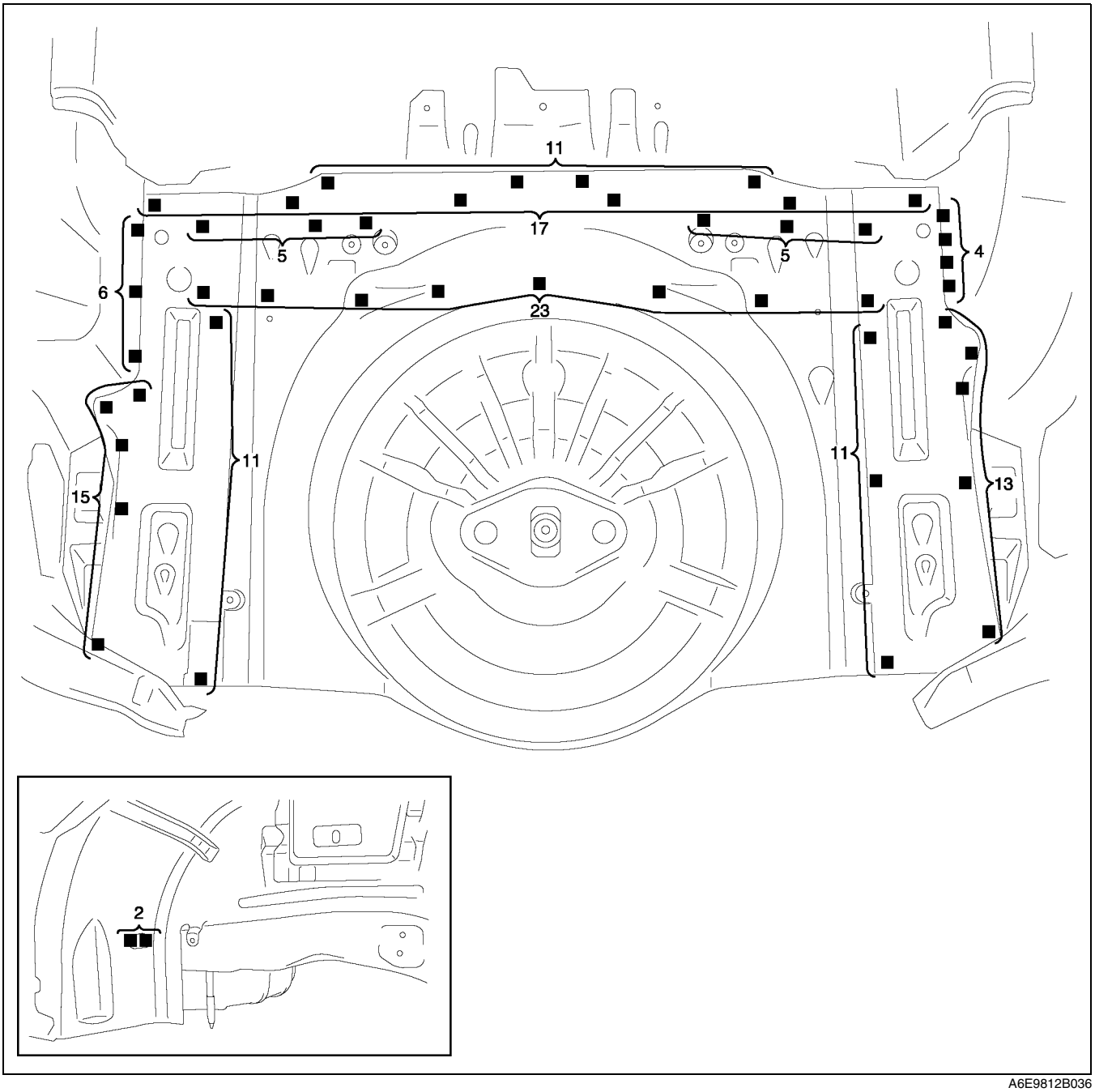

A6E9812B036

FLOOR SIDE PANEL REMOVAL

A6E981253730B01

SEDAN

1. Remove the floor side panel.

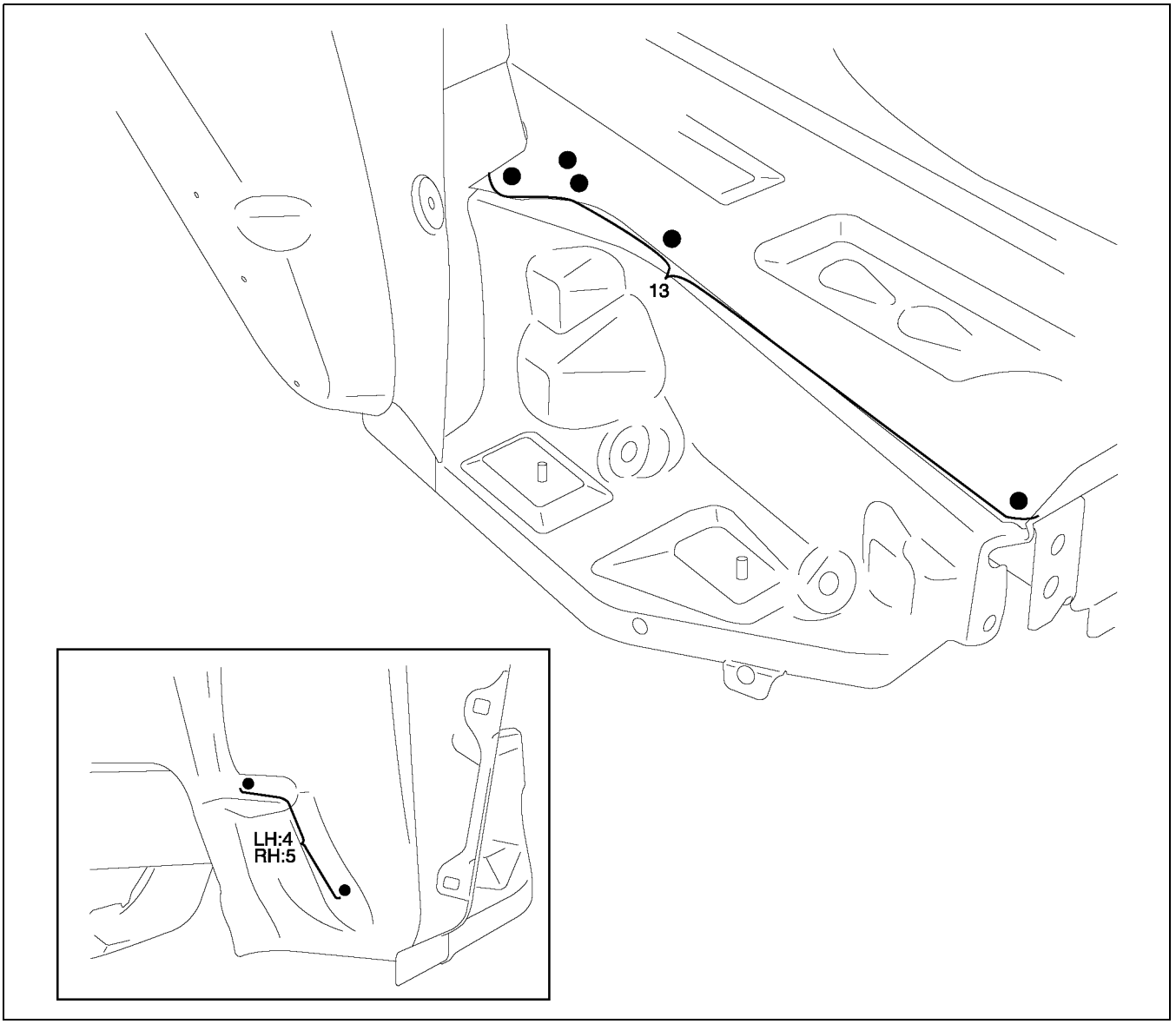

A6E9812B037

5HB

1. Remove the floor side panel.

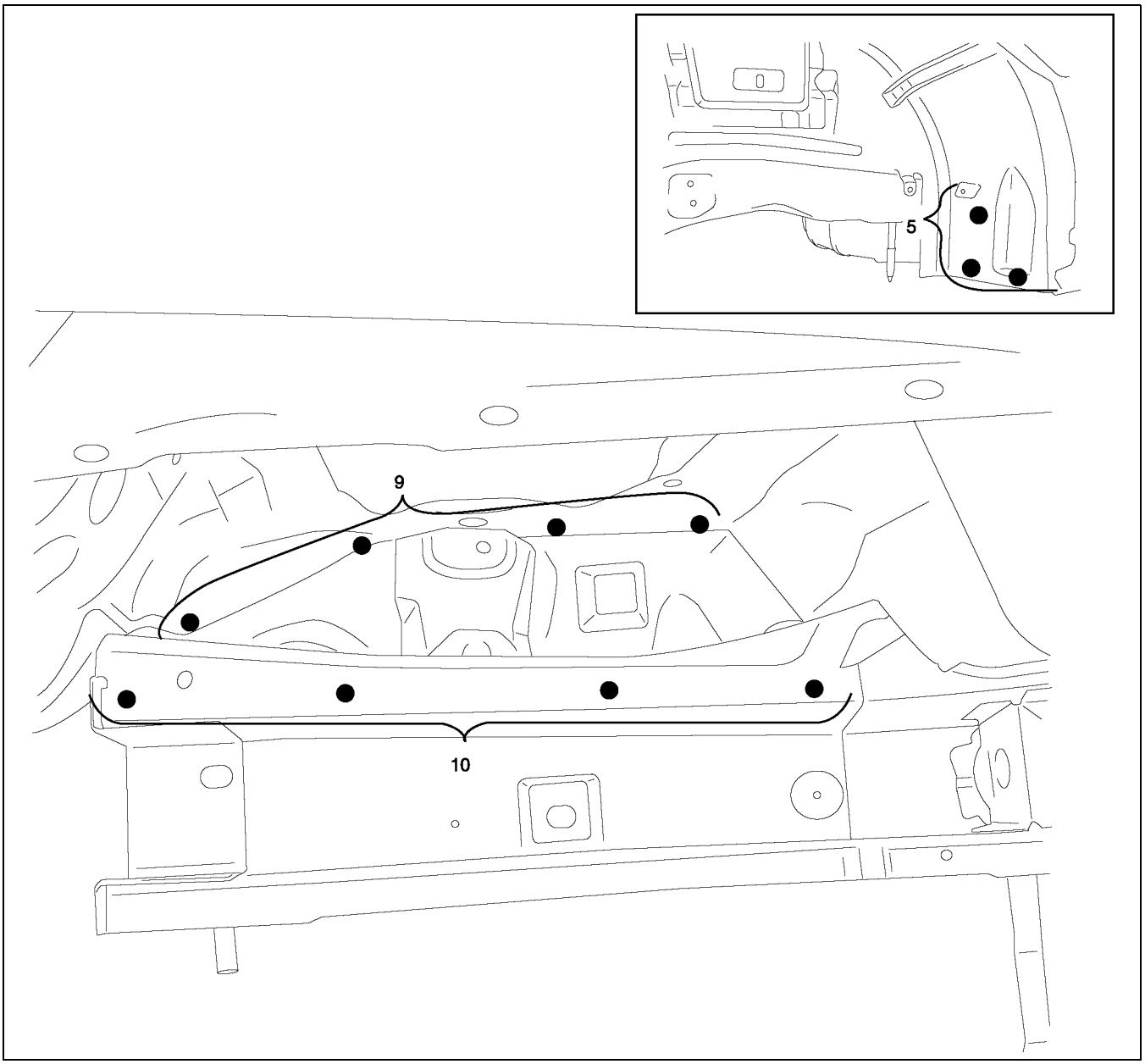

A6E9812B039

FLOOR SIDE PANEL INSTALLATION

A6E981253730B02

SEDAN

1. Drill holes for plug welds before installing new parts.
2. After trial-fitting new parts, make sure the related parts fit properly.

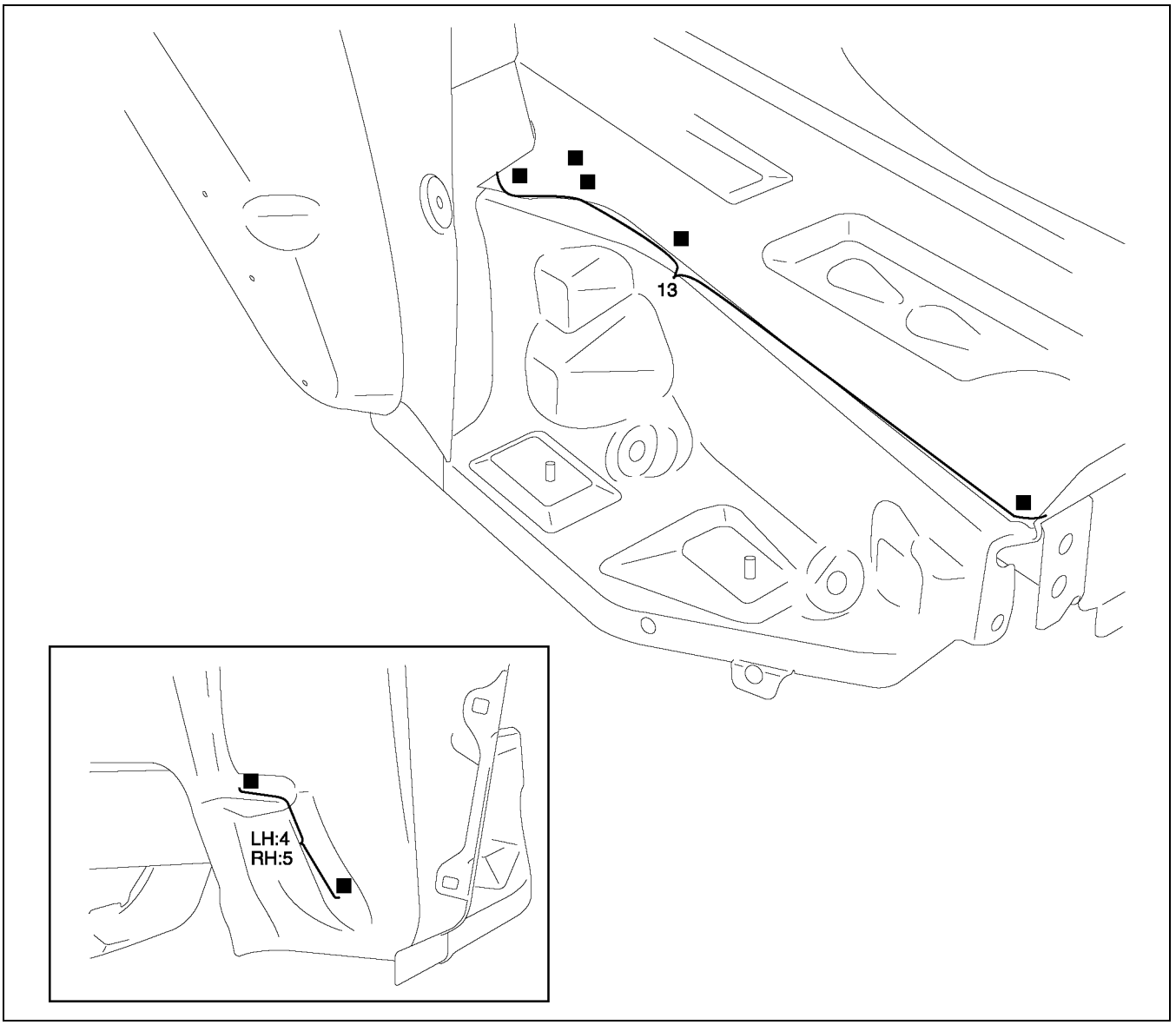

A6E9812B038

5HB

1. Drill holes for plug welds before installing new parts.
2. After trial-fitting new parts, make sure the related parts fit properly.

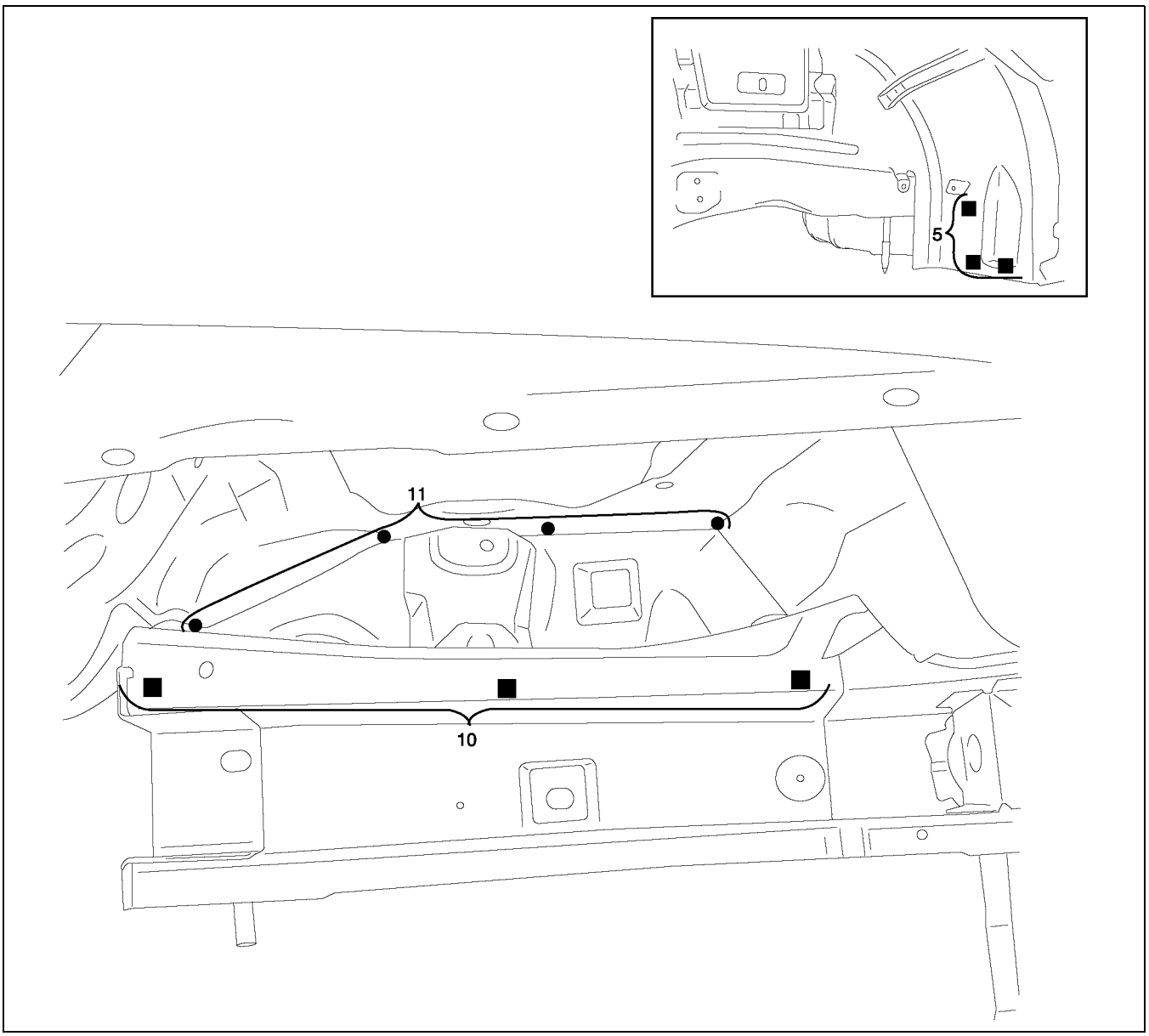

A6E9812B040

REAR SIDE FRAME (PARTIAL CUTTING) REMOVAL

A6E981253815B01

1. Rough cut and remove the damaged part of the rear side frame.

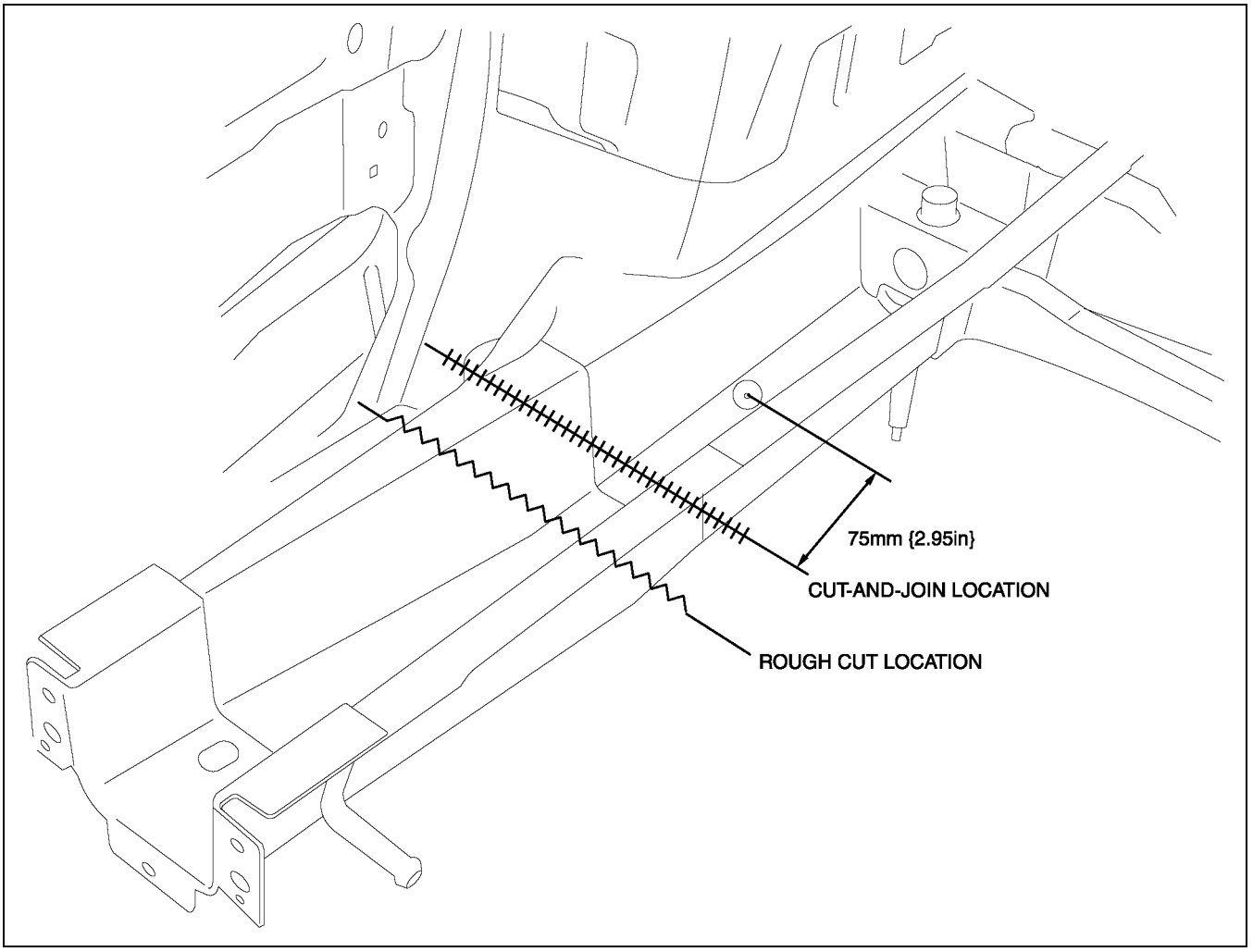

A6E9812B041

REAR SIDE FRAME (PARTIAL CUTTING) INSTALLATION

A6E981253815B02

1. Cut the new and old parts at the cut-and-join location, and bevel the parts.
2. When installing new parts, position each part so that the section measurement aligns to the standard dimensions.
3. After trial-fitting new parts, make sure the related parts fit properly.

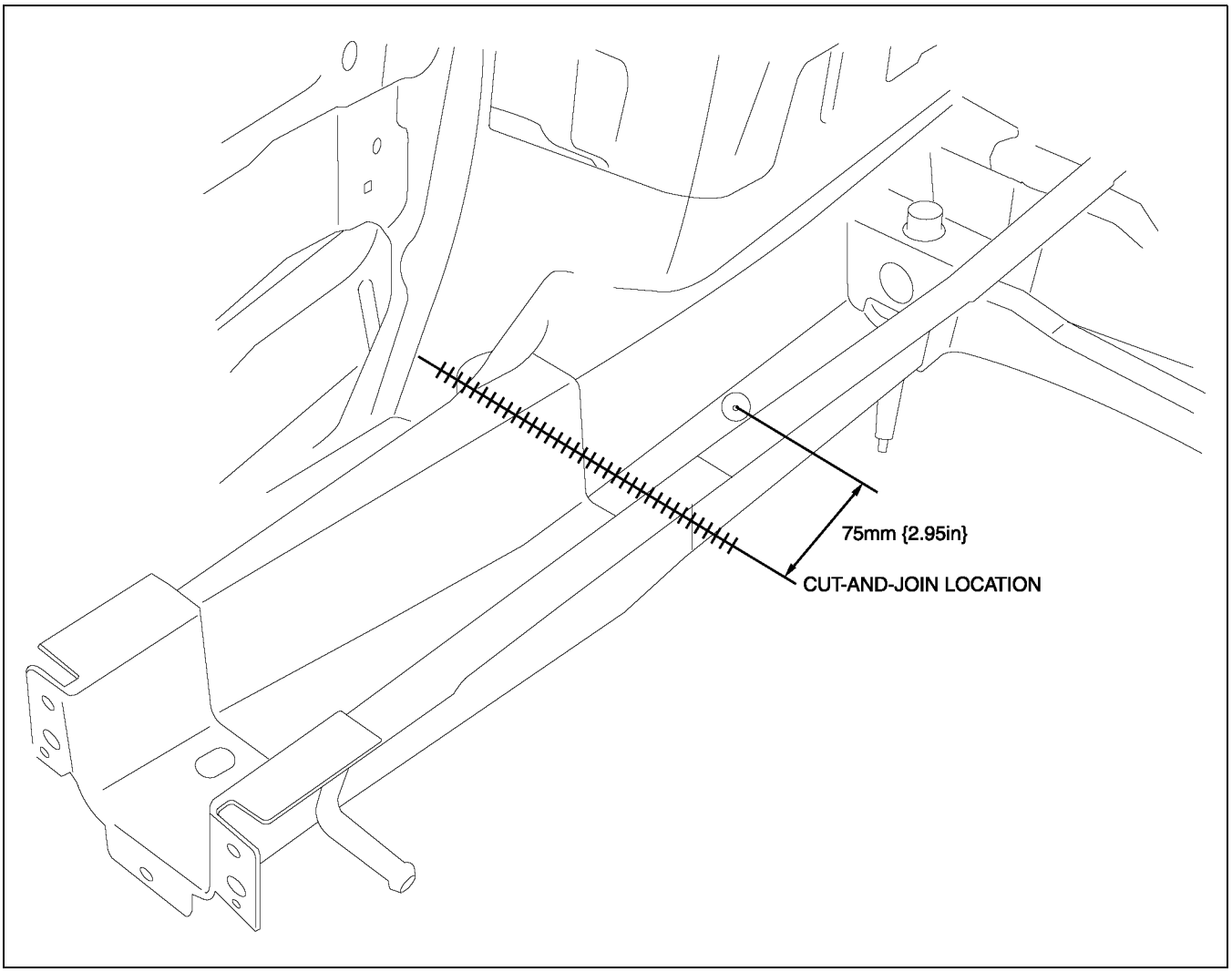

A6E9812B042

ROOF PANEL REMOVAL

A6E981270600B01

SEDAN

1. Remove the roof panel.

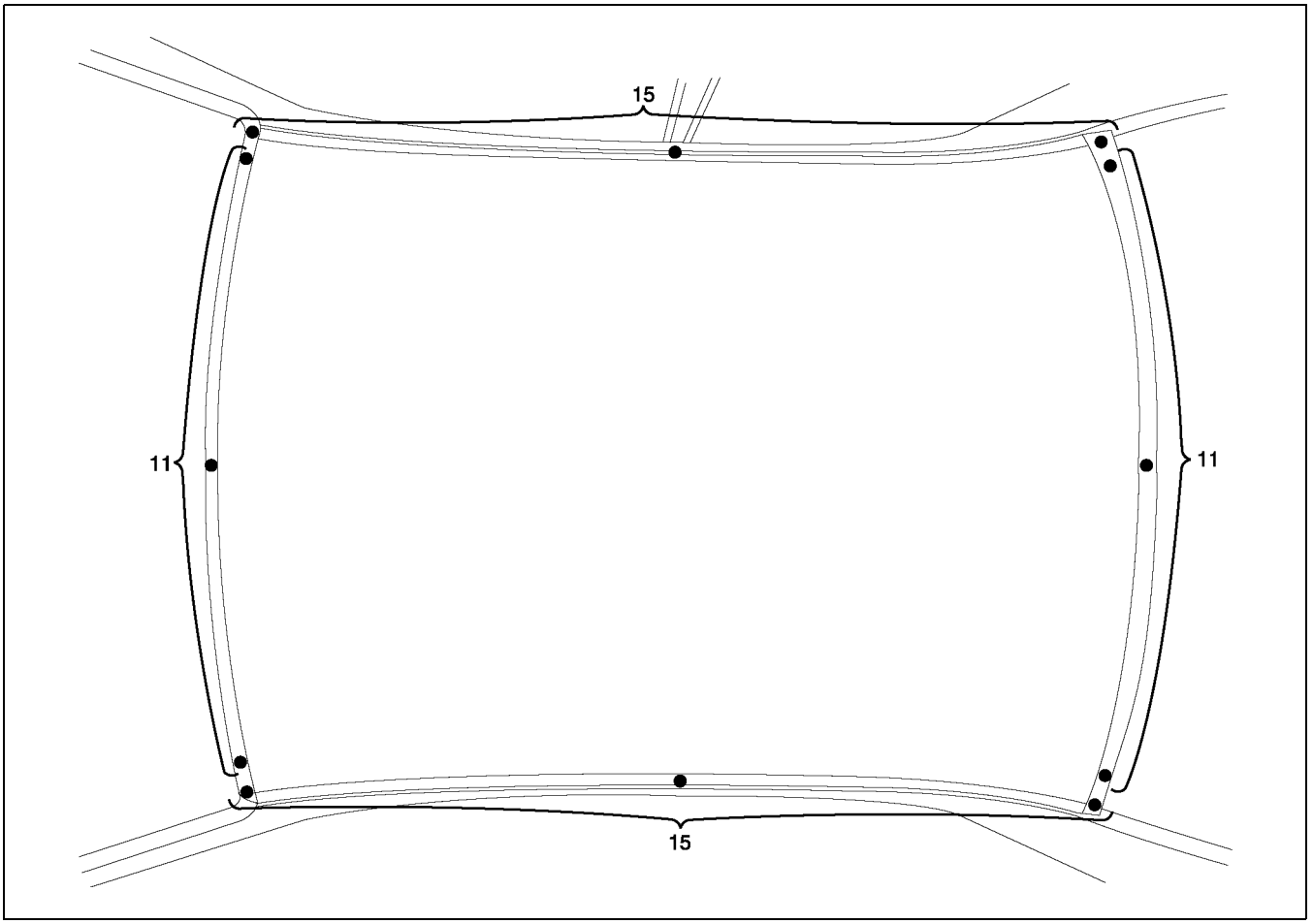

A6E9812B031

5HB

1. Remove the roof panel.

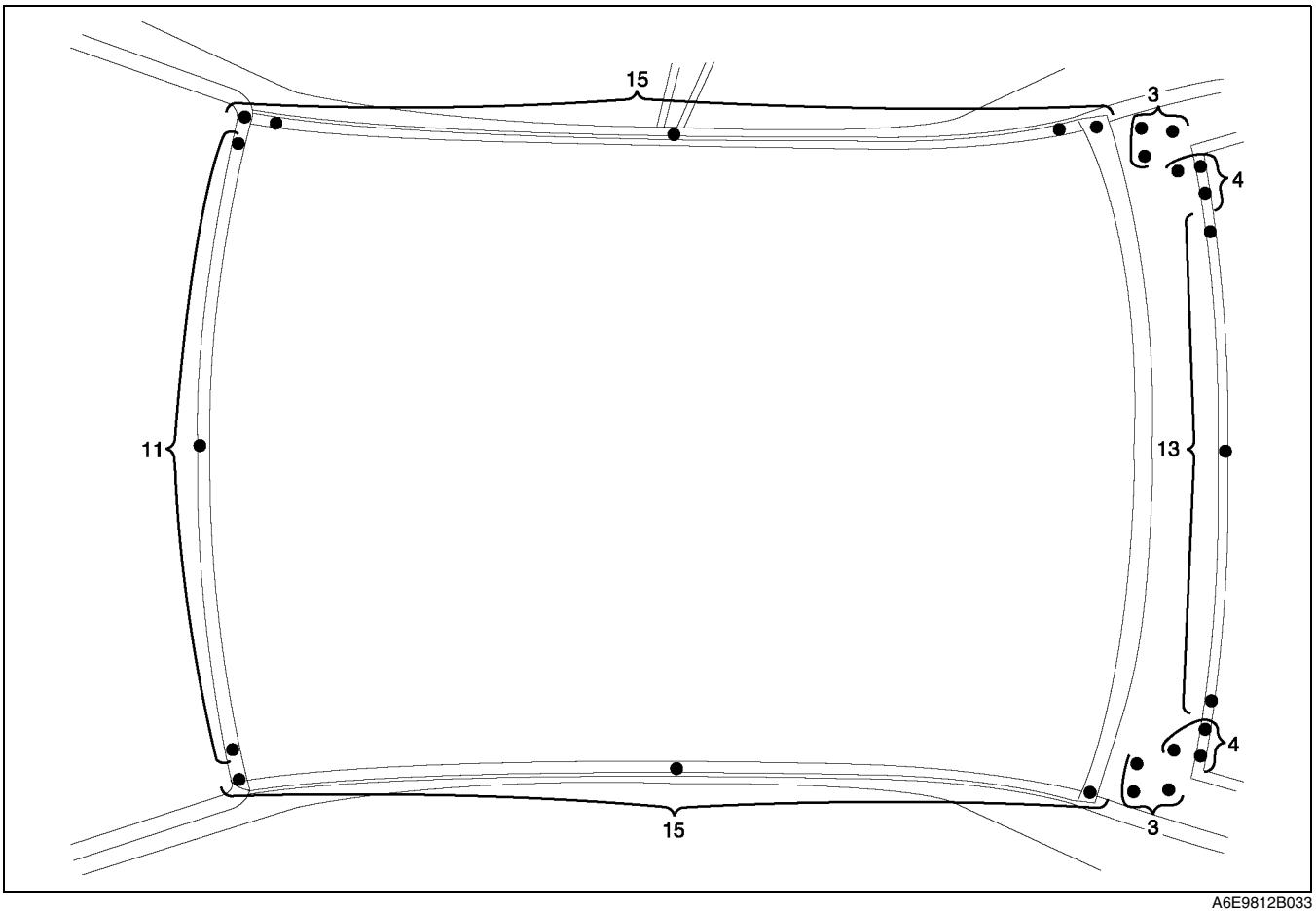

A6E9812B033

ROOF PANEL INSTALLATION

A6E981270600B02

SEDAN

1. Drill holes for plug welds before installing new parts.
2. After trial-fitting new parts, make sure the related parts fit properly.

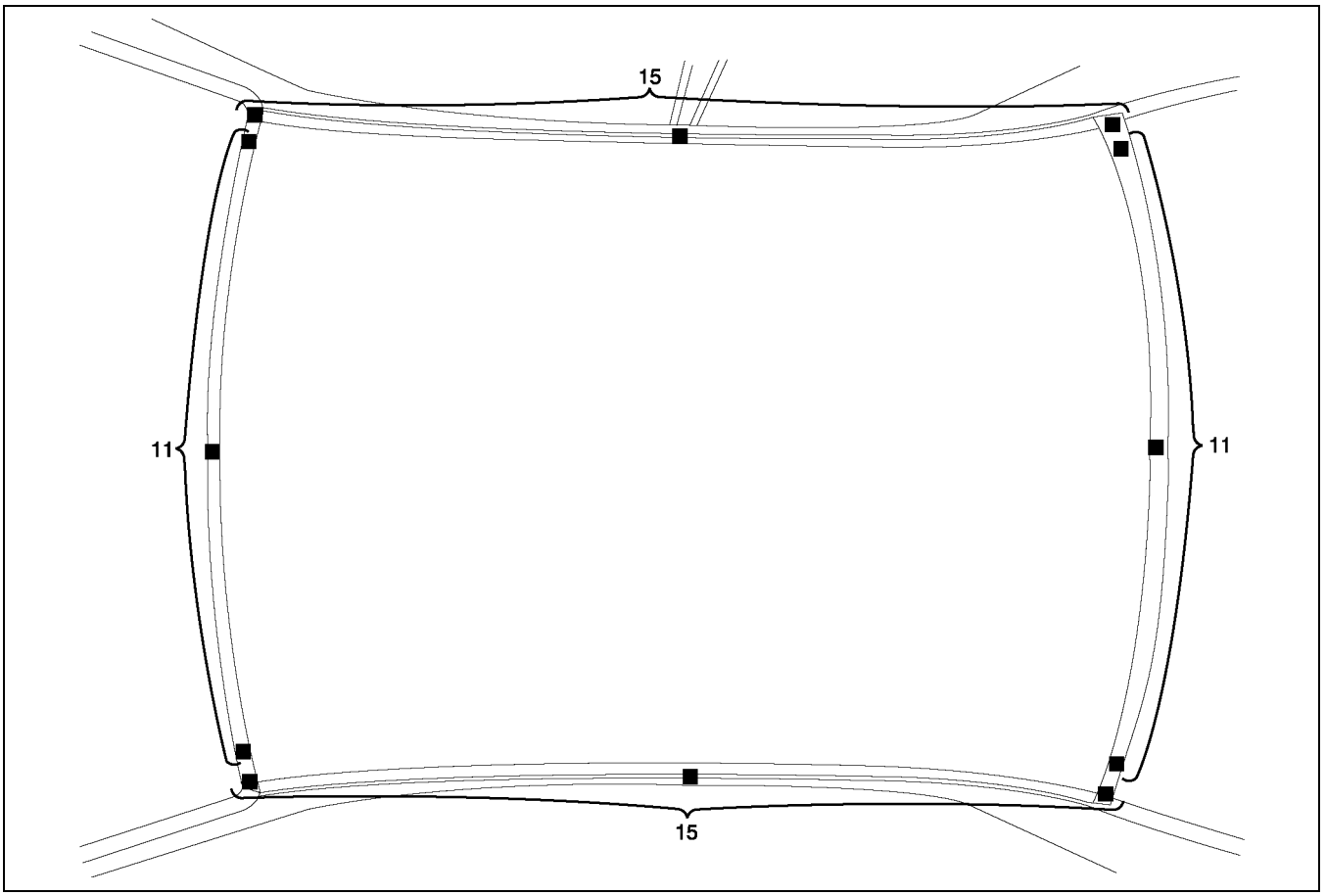

A6E9812B032

5HB

1. Drill holes for plug welds before installing new parts.
2. After trial-fitting new parts, make sure the related parts fit properly.

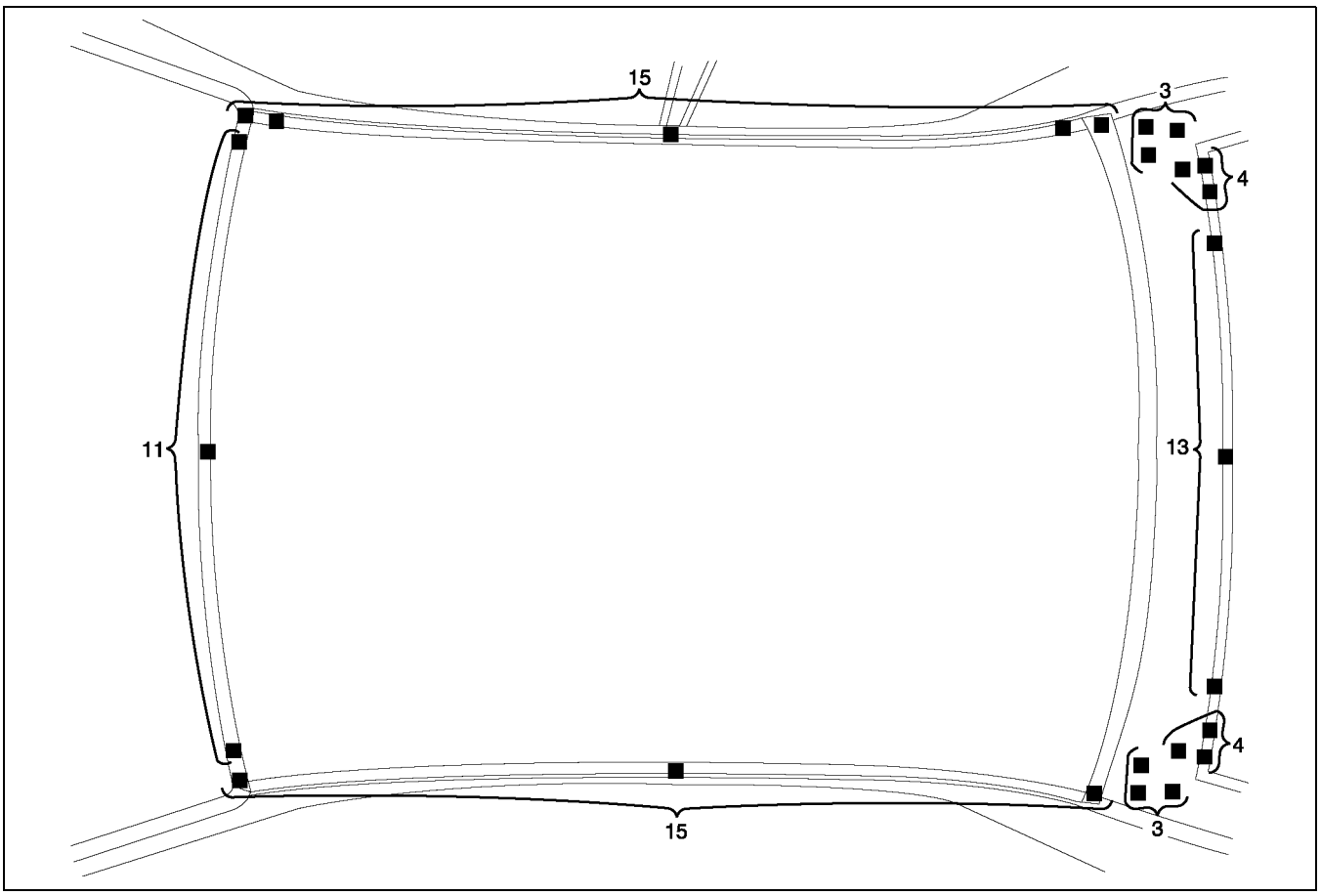

A6E9812B034

WATER-PROOF AND RUST PREVENTIVE TREATMENT

WATER-PROOF AND RUST PREVENTIVE TREATMENT IV-2
BODY SEALING IV-2
UNDER COATING IV-5
PVC PAINTING IV-6
RUST PREVENTIVE TREATMENT IV-7

WATER-PROOF AND RUST PREVENTIVE TREATMENT

BODY SEALING

A6E981407000B01

Sealant is applied to the parts where the panels meet and to the hemmed parts of the door panel and bonnet to provide waterproofing and rust proofing.

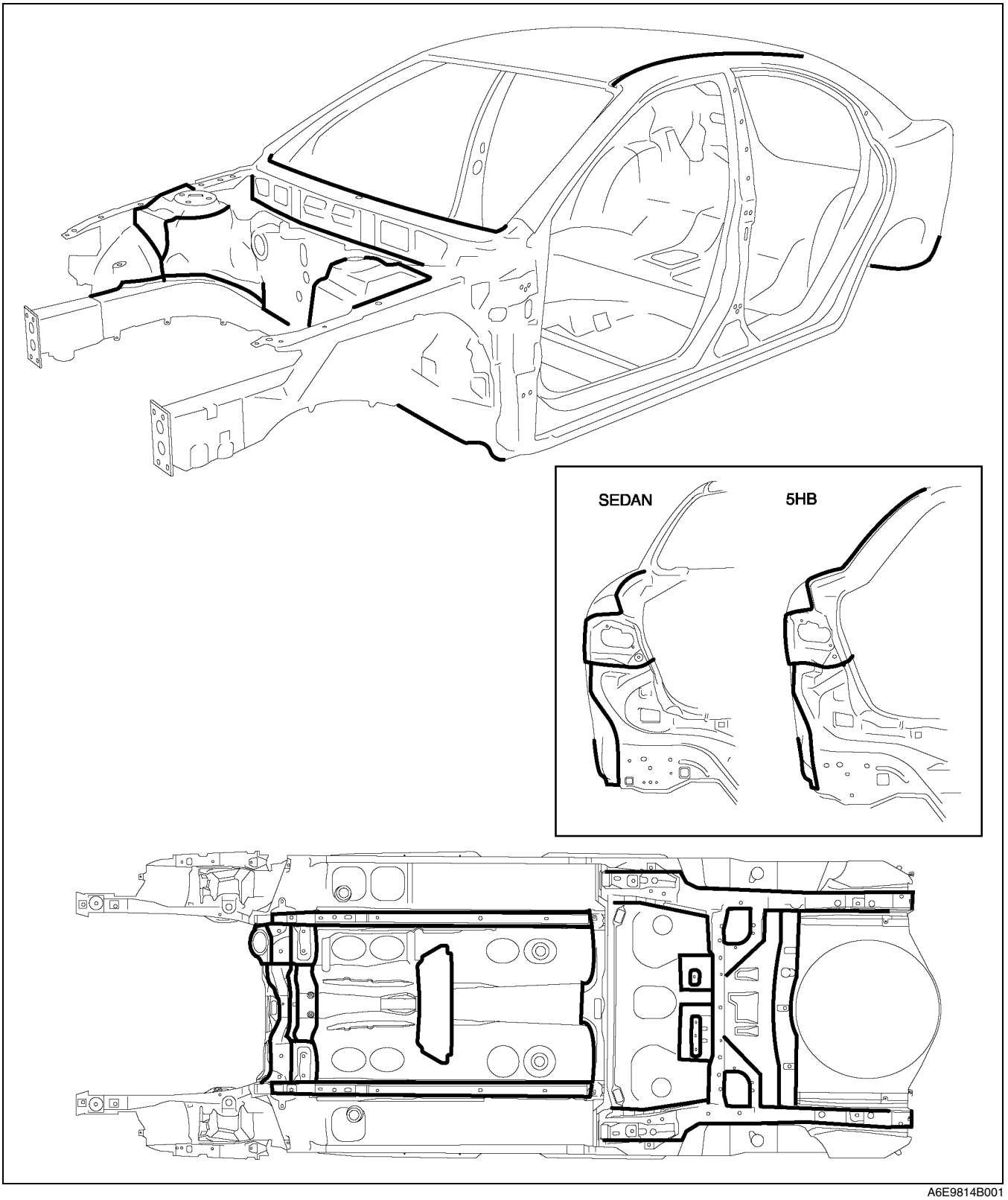

A6E9814B001

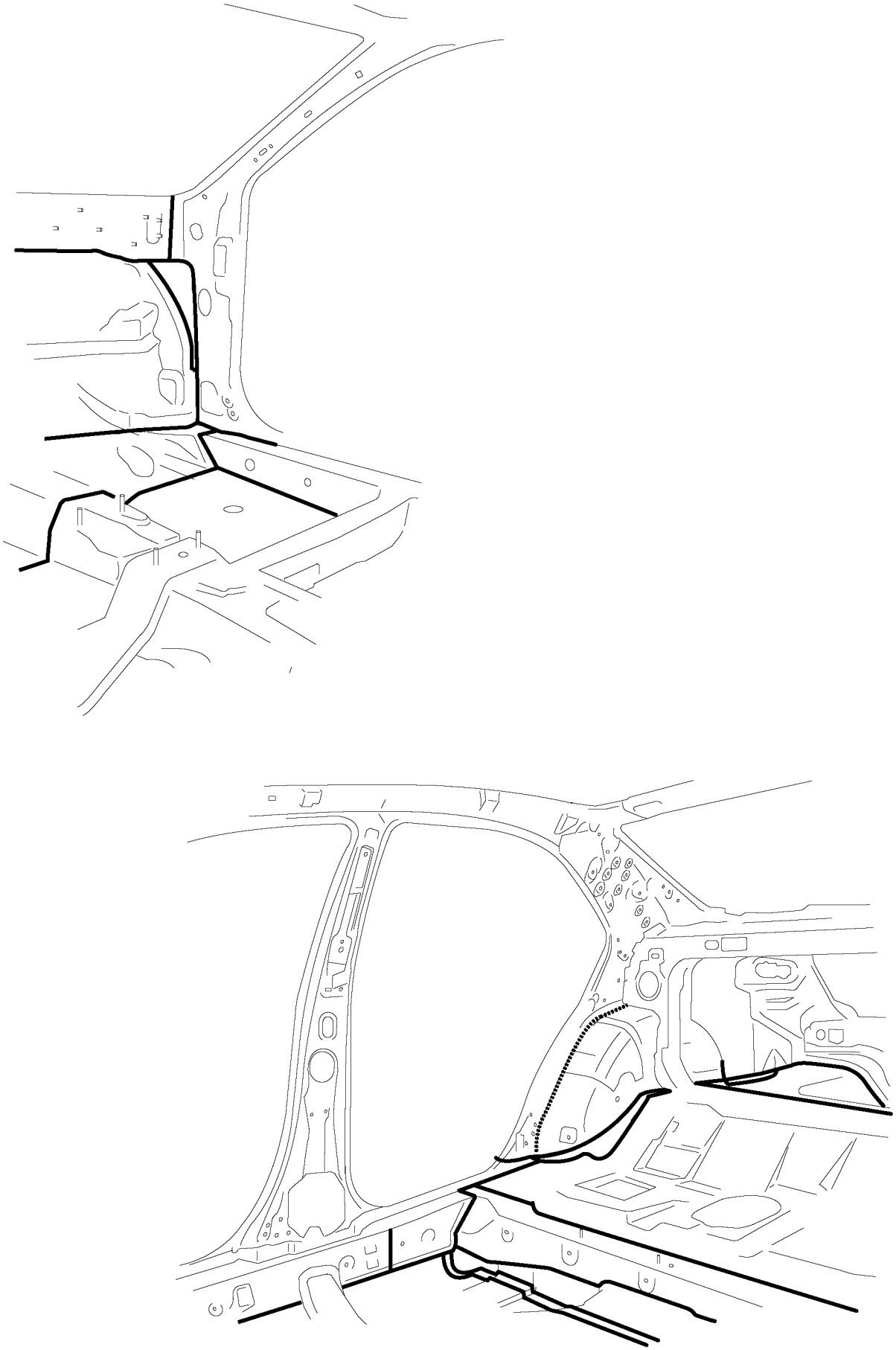

A6E9814B002

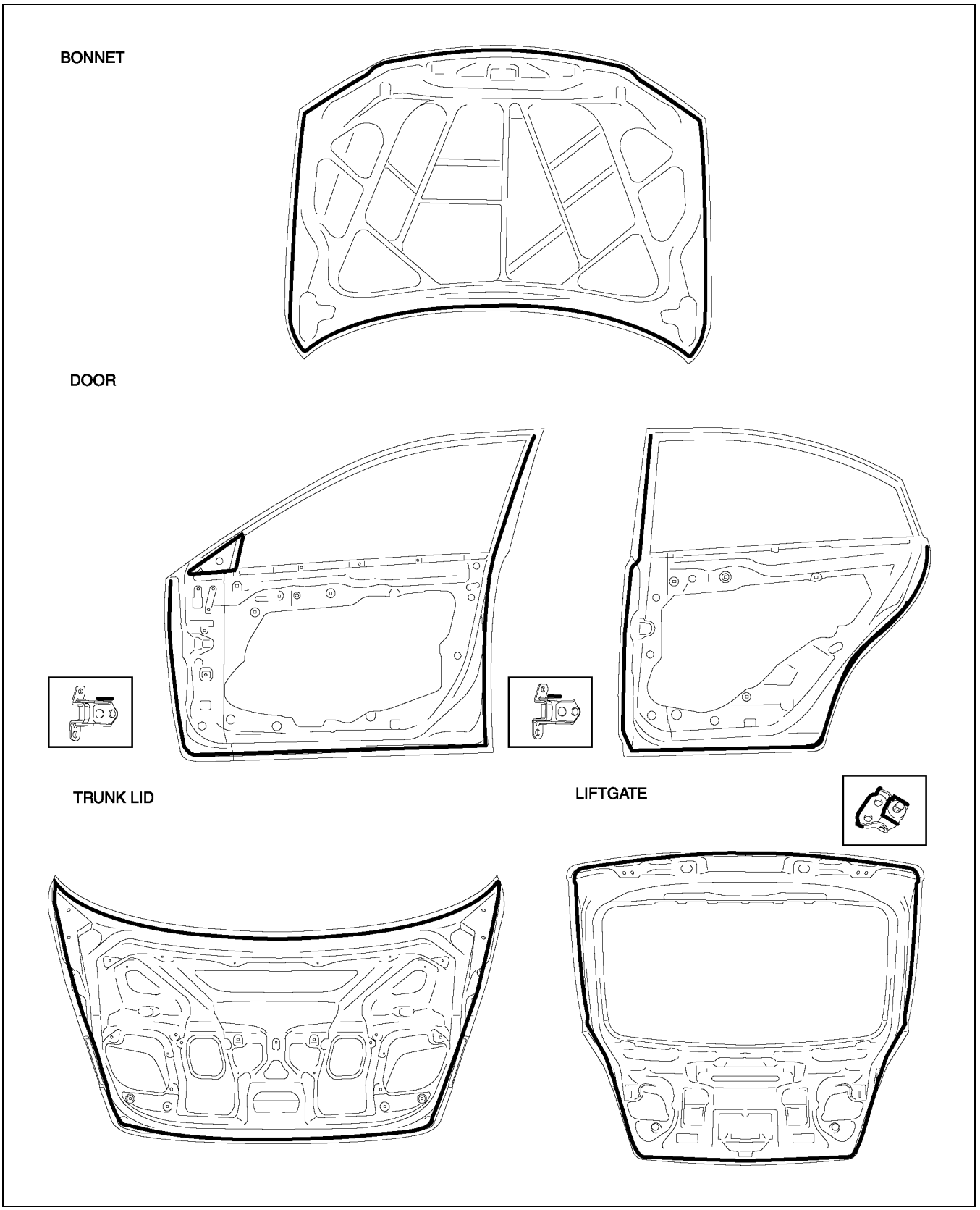

A6E9814B003

UNDER COATING

A6E981407000B02

The shaded areas indicated underbody locations that are undercoated to prevent noise and rusting.

European(L.H.D. U.K.)specs

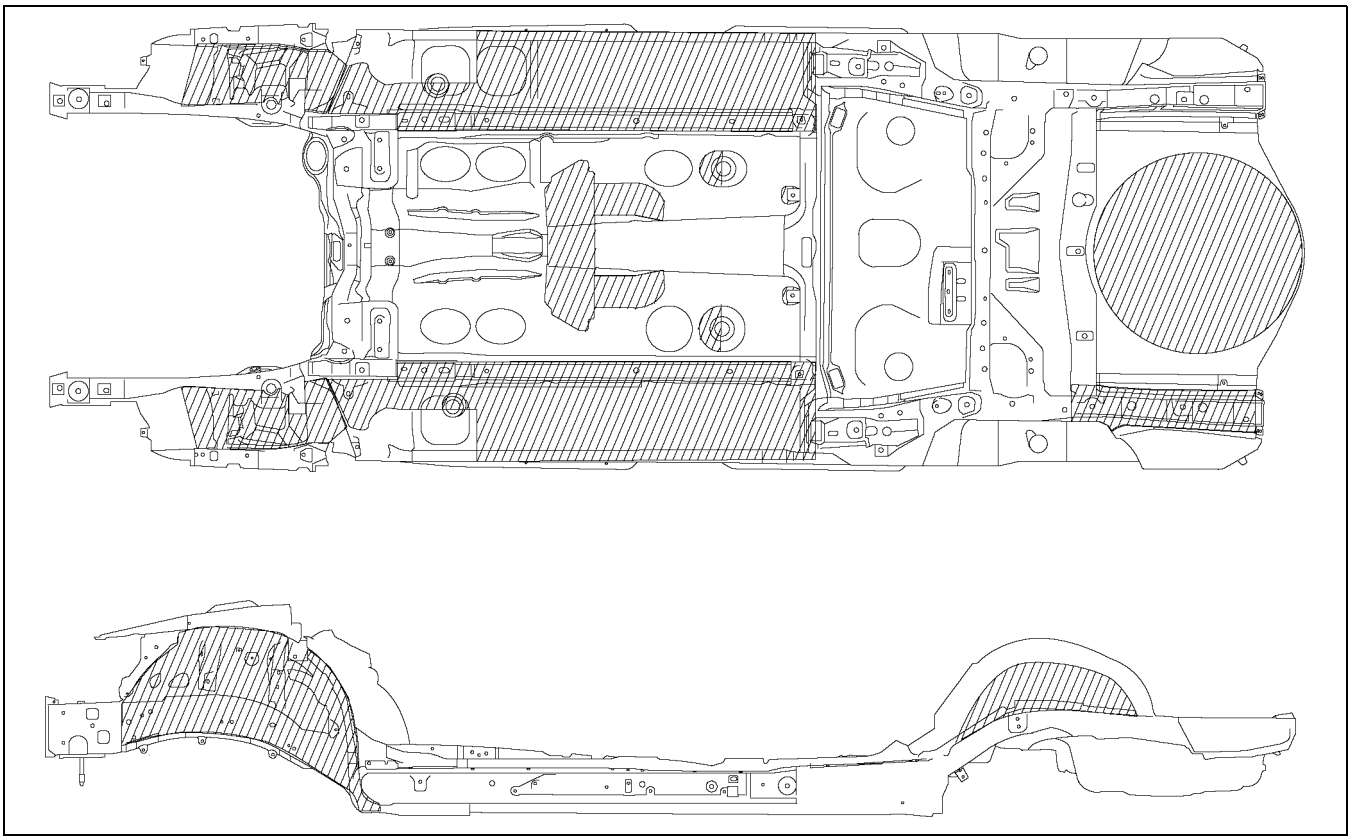

A6E9814B004

GCC specs

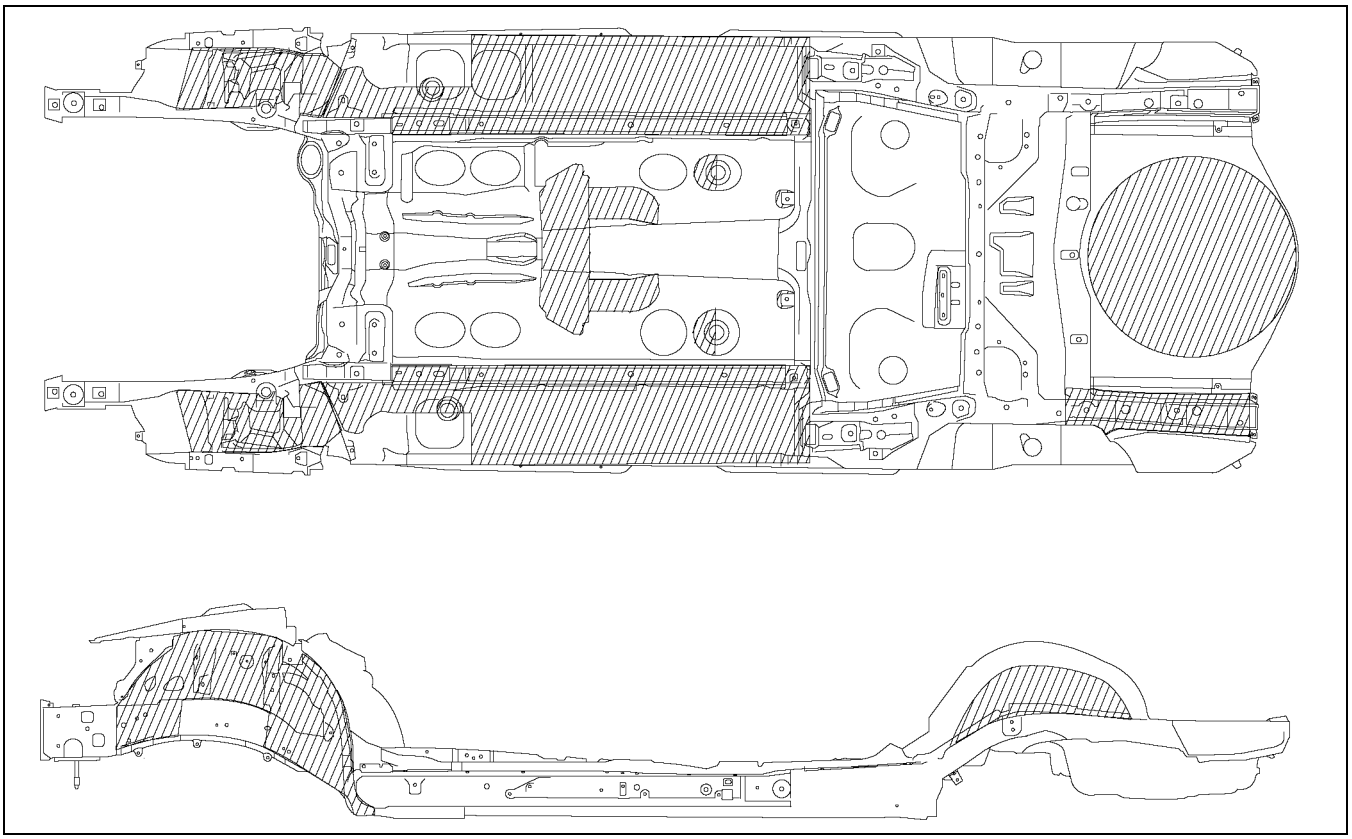

A6E9814B009

PVC PAINTING

A6E981407000B04

The coating locations are indicated by the shaded areas.

SEDAN

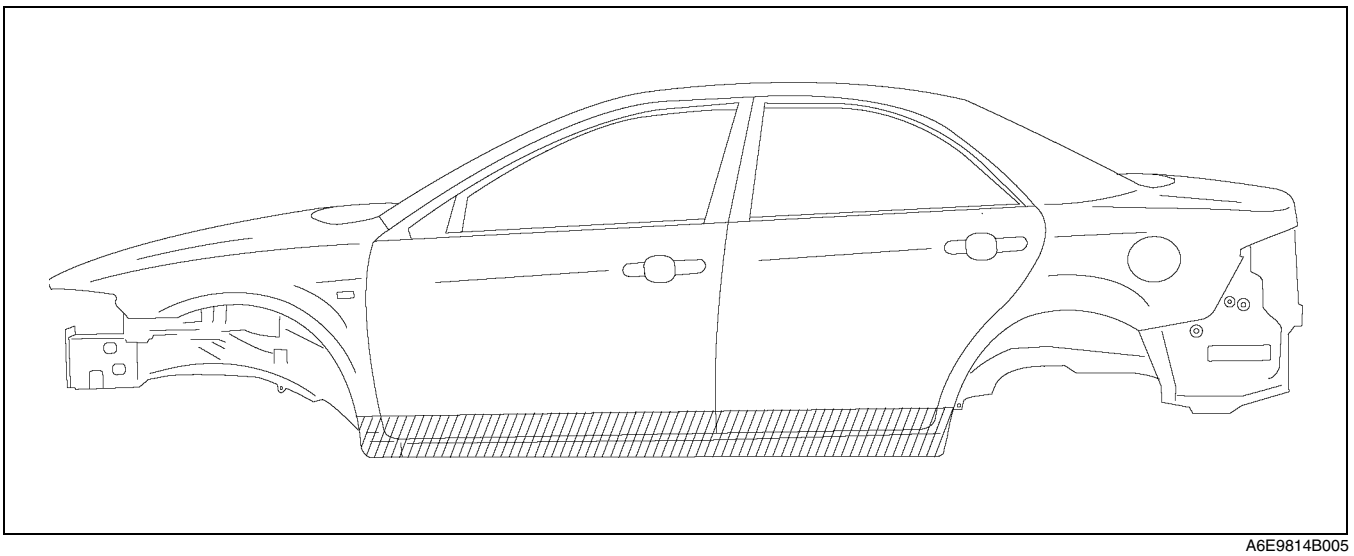

A6E9814B005

5HB

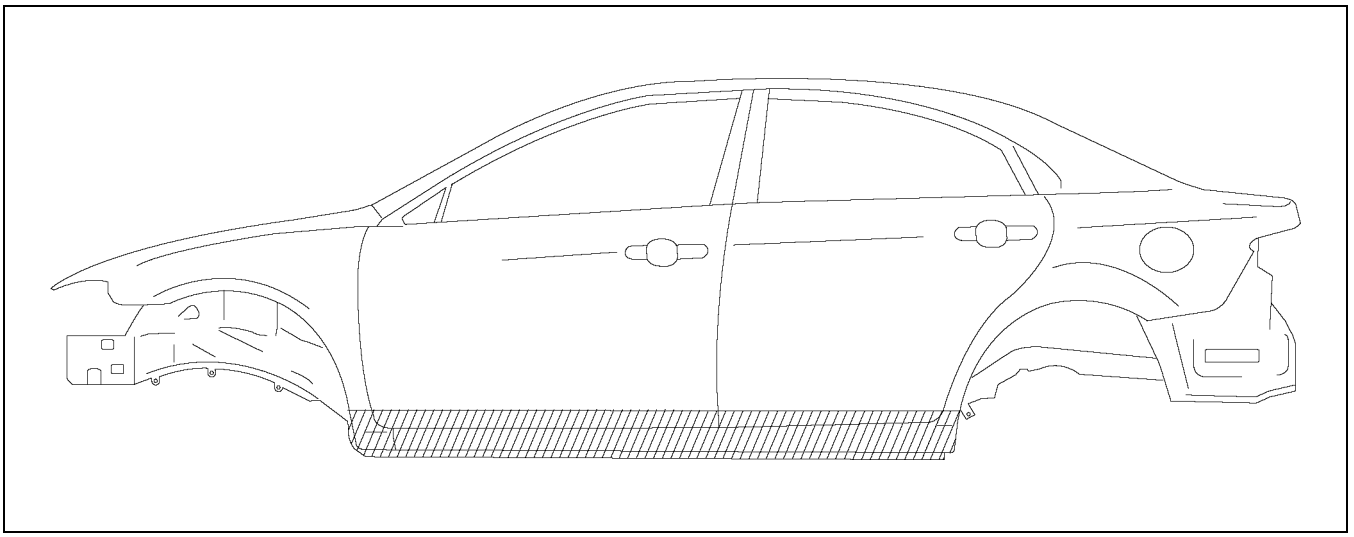

A6E9814B006

RUST PREVENTIVE TREATMENT

A6E981407000B03

The coating locations are indicated by the shaded areas.

SEDAN

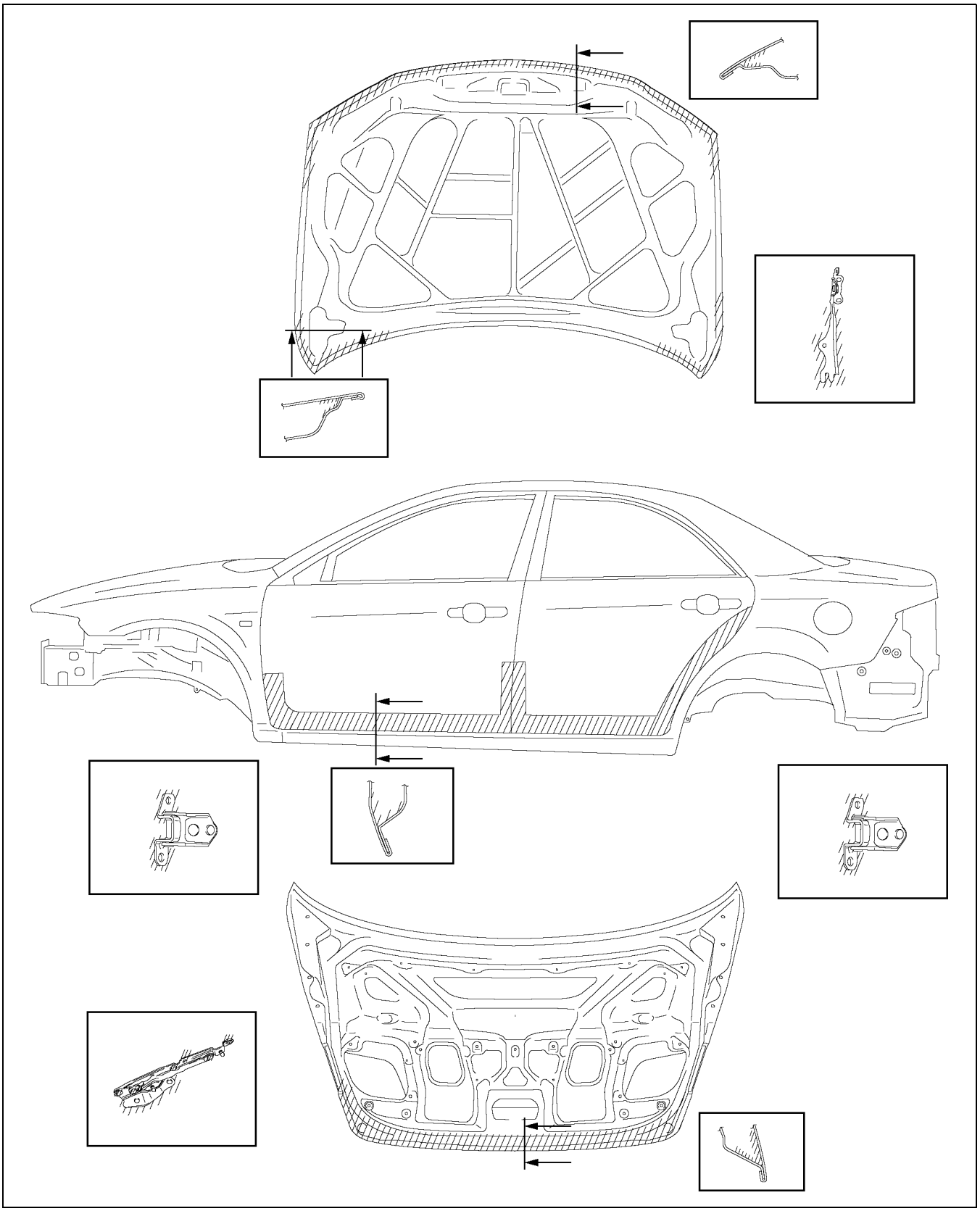

A6E9814B007

5HB

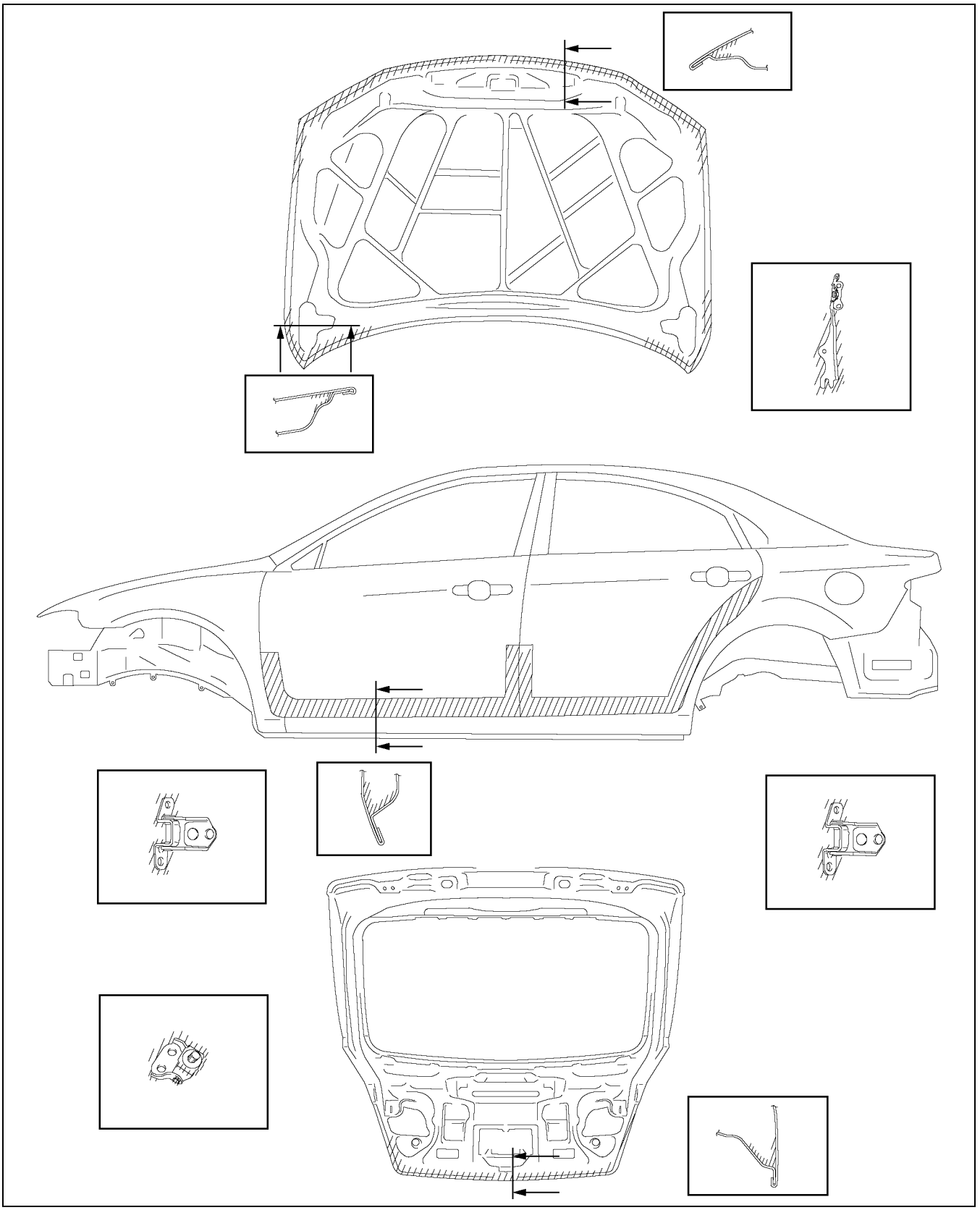

A6E9814B008

DIMENSIONS

DIMENSIONS V-2
UNDERBODY FLAT-PLANE DIMENSIONS..... V-2
UNDERBODY STRAIGHT-LINE DIMENSIONS V-3
FRONT BODY STRAIGHT-LINE DIMENSIONS (1) V-4
FRONT BODY STRAIGHT-LINE DIMENSIONS (2) V-5
CABIN SIDE FRAME STRAIGHT-LINE DIMENSIONS V-6
ROOM STRAIGHT-LINE DIMENSIONS (1) V-8
ROOM STRAIGHT-LINE DIMENSIONS (2) V-9
REAR BODY STRAIGHT-LINE DIMENSIONS.. V-11

DIMENSIONS

UNDERBODY FLAT-PLANE DIMENSIONS

A6E981653010B01

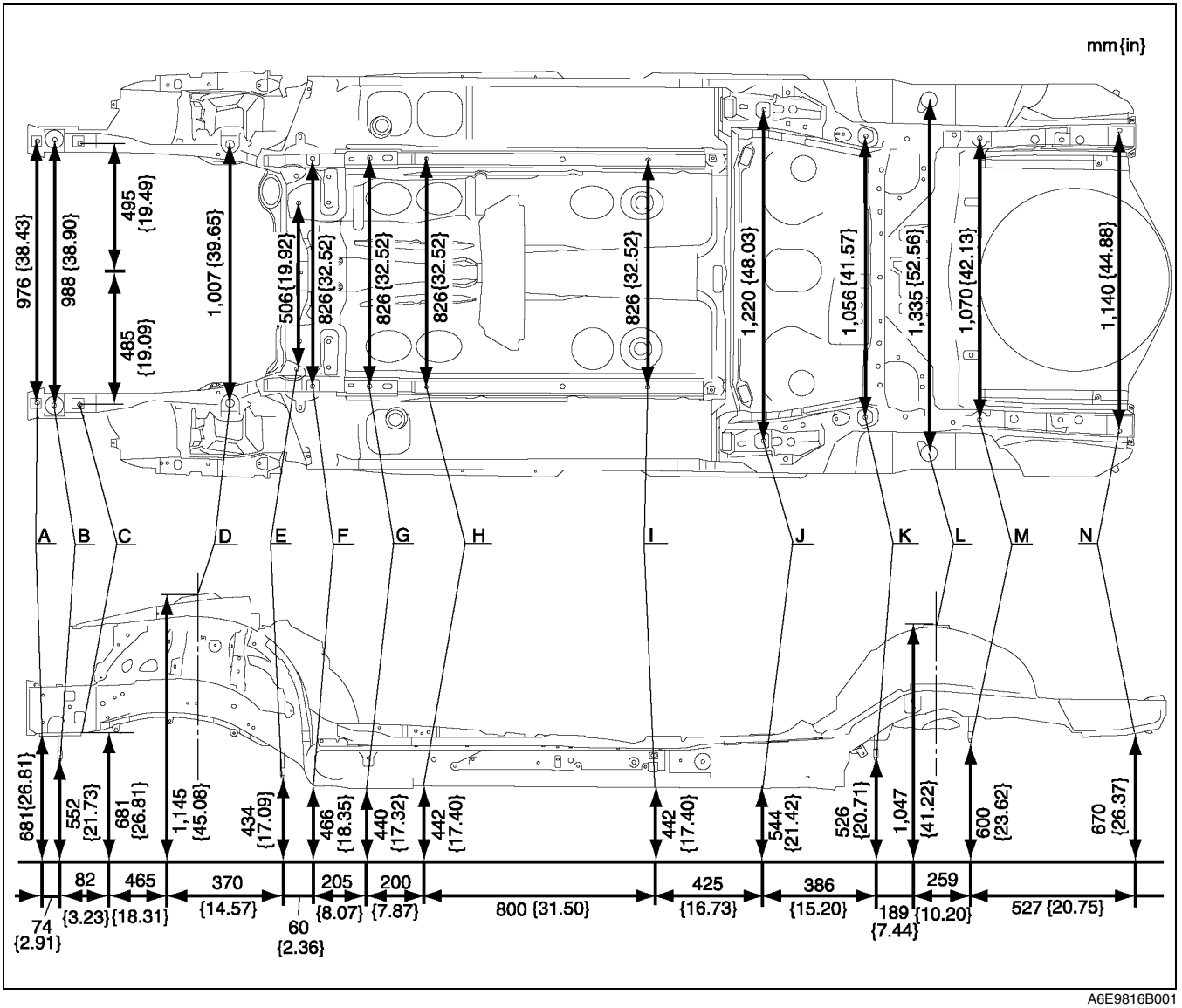

A6E9816B001

Point symbol	Designation	Hole diameter or bolt or nut size mm {in}
A	Front side frame standard hole	ø16 {0.63}
B	Front crossmember mounting bolt	M14 {0.55}
C	Front side frame standard hole	ø16 {0.63}
D	Front suspension mounting block standard hole	ø59 {2.32}
E	Front crossmember mounting bolt	M14 {0.55}
F	Front frame rear standard hole	ø18 {0.71}
G	Front frame rear standard hole	ø16 {0.63}
H	Front B frame standard hole	ø12 {0.47}

Point symbol	Designation	Hole diameter or bolt or nut size mm {in}
I	Front B frame standard hole	14 × 20 {0.55 × 0.79}
J	Rear side frame standard hole	ø20 {0.79}
K	Rear crossmember mounting bolt	M14 {0.55}
L	Rear suspension housing bolt	M6 {0.24}
M	Rear crossmember mounting bolt	M14 {0.55}
N	Rear side frame standard hole	16 × 20 {0.63 × 0.79}

UNDERBODY STRAIGHT-LINE DIMENSIONS

A6E981653010B02

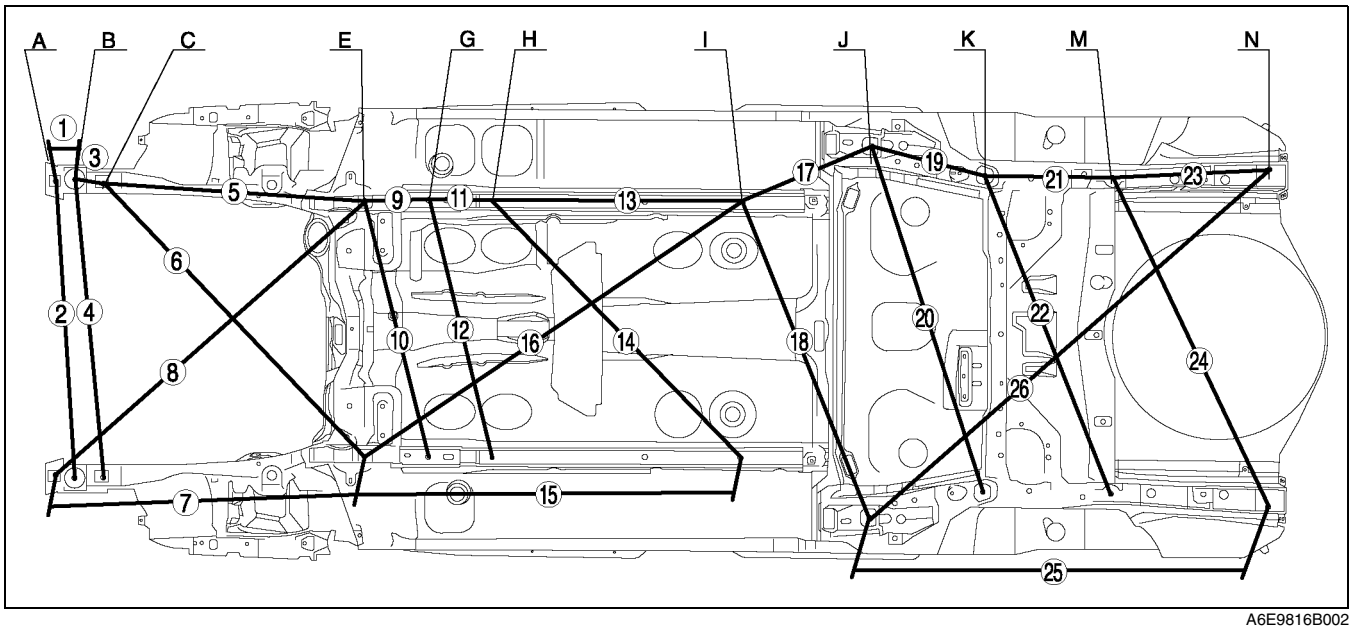

A6E9816B002

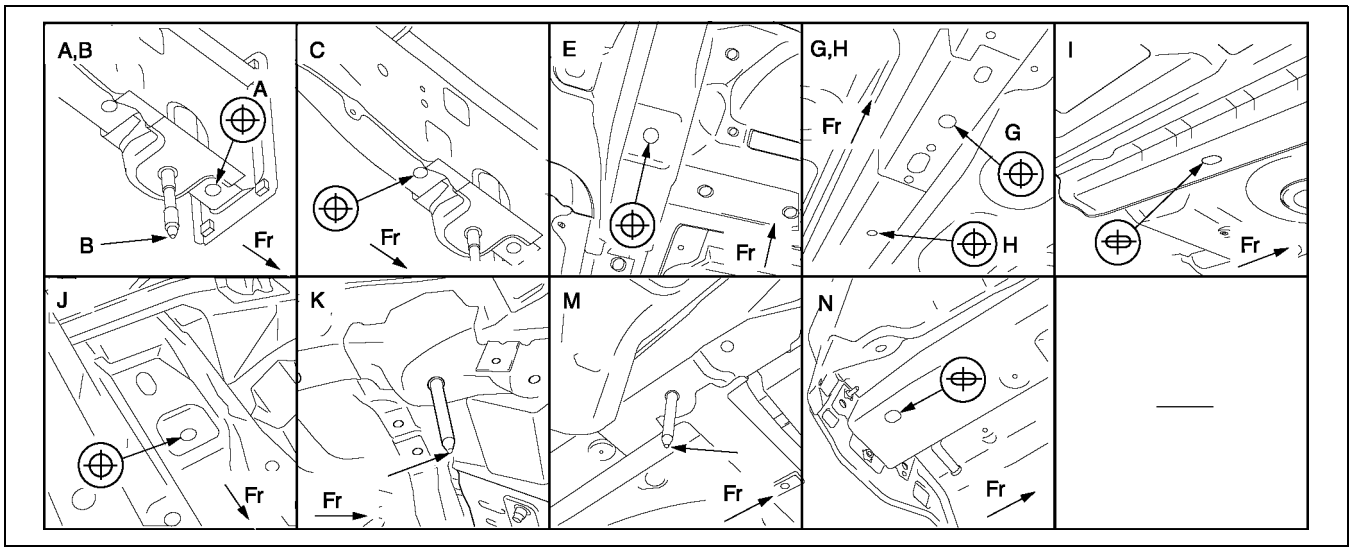

A6E9816B003

Measured location	Dimensions mm {in}
1	149 {5.87}
2	993 {39.09}
3	RH:152 {5.98}, LH:153 {6.02}
4	RH:991 {39.02}, LH:1,001 {39.41}
5	RH:924 {36.38}, LH:923 {36.34}
6	RH:1,293 {50.91}, LH:1,286 {50.63}
7	1,076 {42.36}
8	1,401 {55.16}
9	207 {8.15}
10	851 {33.50}
11	200 {7.87}
12	850 {33.46}
13	800 {31.50}

Measured location	Dimensions mm {in}
14	1,150 {45.28}
15	1,205 {47.44}
16	1,461 {57.52}
17	479 {18.86}
18	1,112 {43.78}
19	395 {15.55}
20	1,202 {47.32}
21	454 {17.87}
22	1,156 {45.51}
23	532 {20.94}
24	1,226 {48.27}
25	1,366 {53.78}
26	1,805 {71.06}

FRONT BODY STRAIGHT-LINE DIMENSIONS (1)

A6E981653020B01

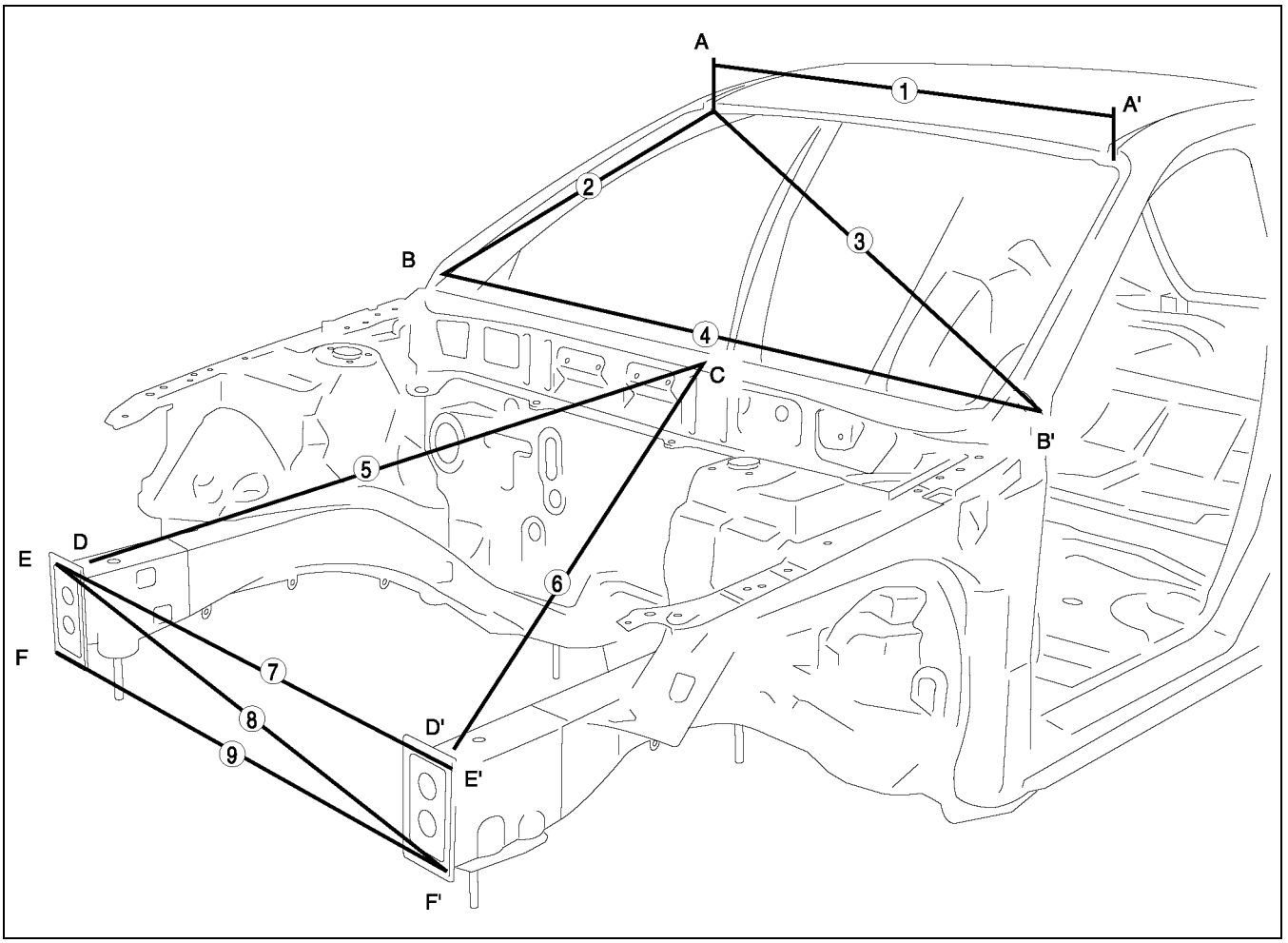

A6E9816B004

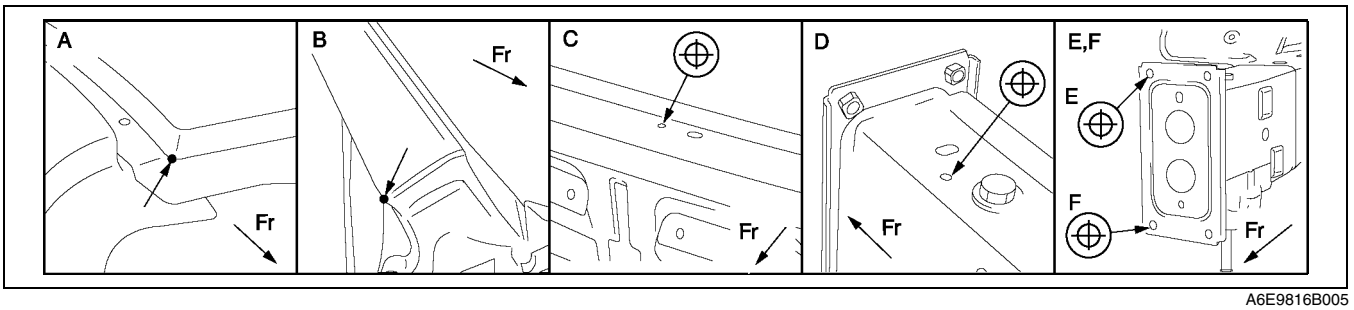

A6E9816B005

Measured location	Dimensions mm {in}
1	1,023 {40.28}
2	749 {29.49}
3	1,458 {57.40}
4	1,529 {60.20}
5	1,070 {42.13}

Measured location	Dimensions mm {in}
6	1,085 {42.72}
7	1,070 {42.13}
8	1,084 {42.68}
9	1,070 {42.13}

FRONT BODY STRAIGHT-LINE DIMENSIONS (2)

A6E981653020B02

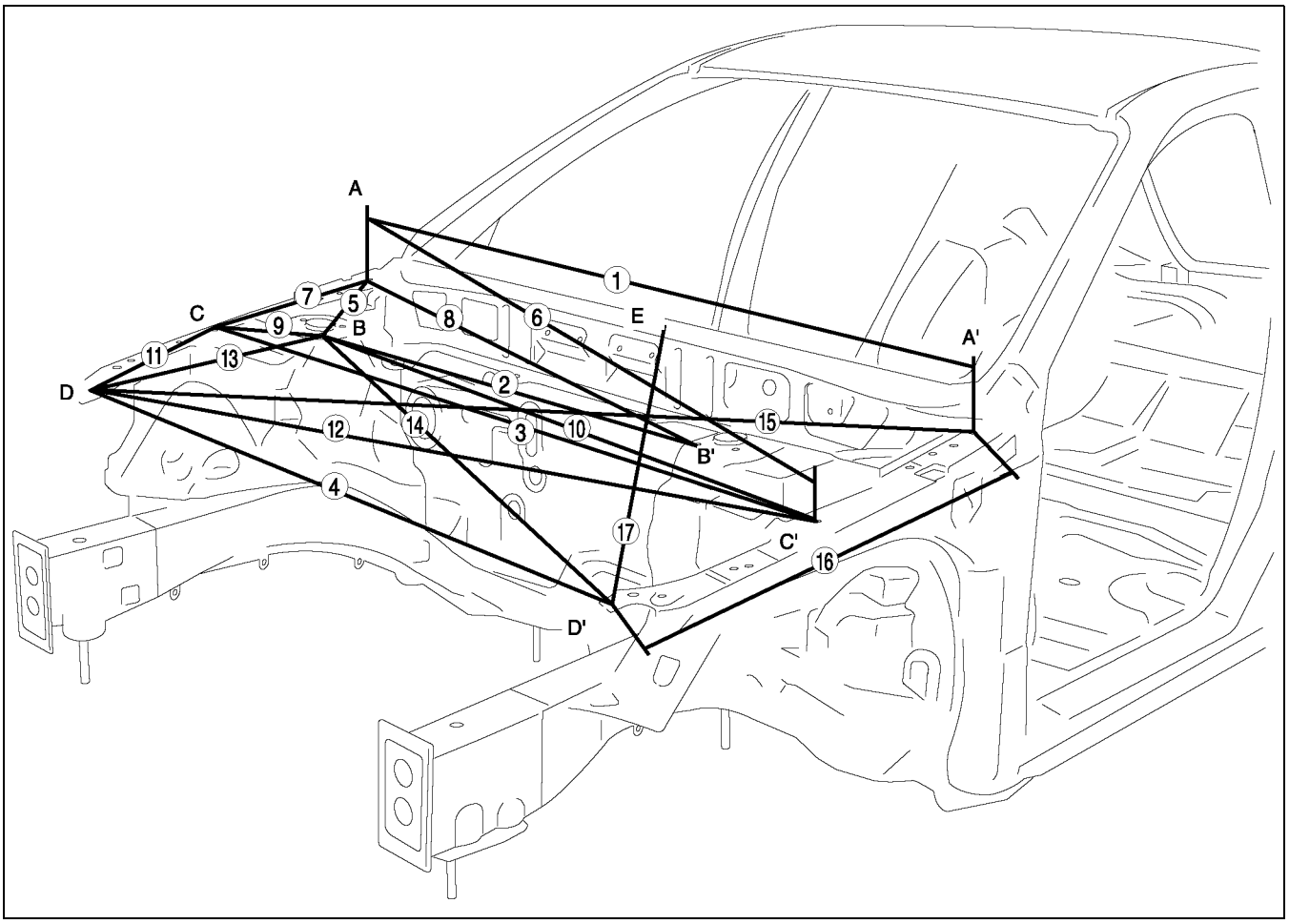

A6E9816B006

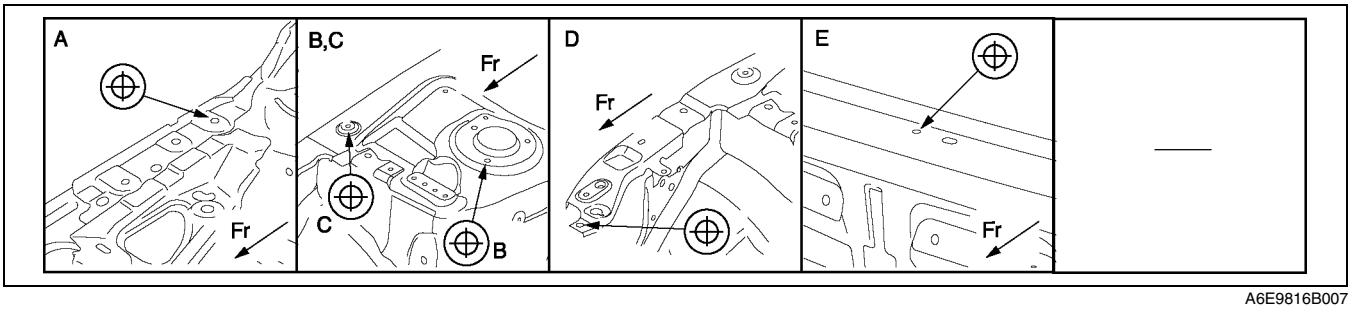

A6E9816B007

Measured location	Dimensions mm {in}
1	1,480 {58.27}
2	959 {37.76}
3	1,481 {58.31}
4	1,340 {52.76}
5	452 {17.80}
6	1,538 {60.55}
7	418 {16.46}
8	1,274 {50.16}
9	268 {10.55}

Measured location	Dimensions mm {in}
10	1,221 {48.07}
11	363 {14.29}
12	1,455 {57.28}
13	451 {17.76}
14	1,220 {48.03}
15	1,608 {63.31}
16	777 {30.59}
17	1,009 {39.72}

CABIN SIDE FRAME STRAIGHT-LINE DIMENSIONS

A6E981670010B01

SEDAN

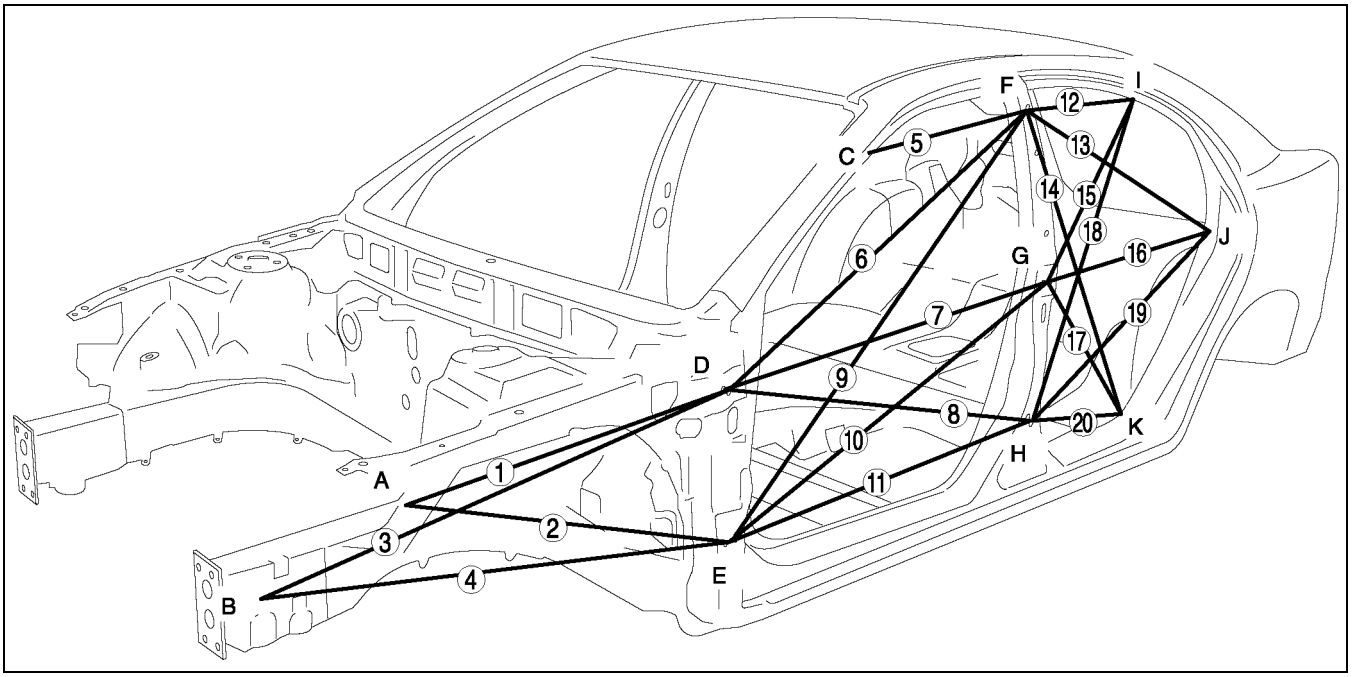

A6E9816B008

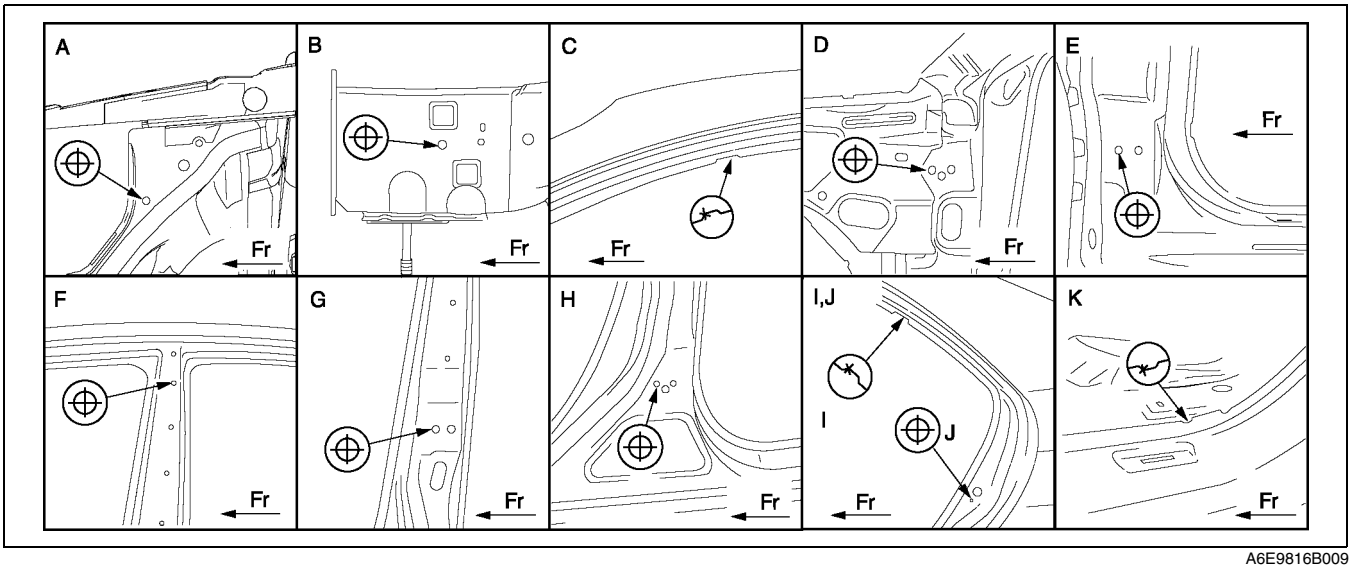

A6E9816B009

Measured location	Dimensions mm {in}
1	692 {27.24}
2	747 {29.41}
3	998 {39.29}
4	968 {38.11}
5	451 {17.76}
6	1,349 {53.11}
7	1,144 {45.04}
8	1,144 {45.04}
9	1,501 {59.09}
10	1,204 {47.40}

Measured location	Dimensions mm {in}
11	1,093 {43.03}
12	662 {26.06}
13	943 {37.13}
14	979 {38.54}
15	864 {34.02}
16	921 {36.26}
17	683 {26.89}
18	1,093 {43.03}
19	1,004 {39.53}
20	536 {21.10}

5HB

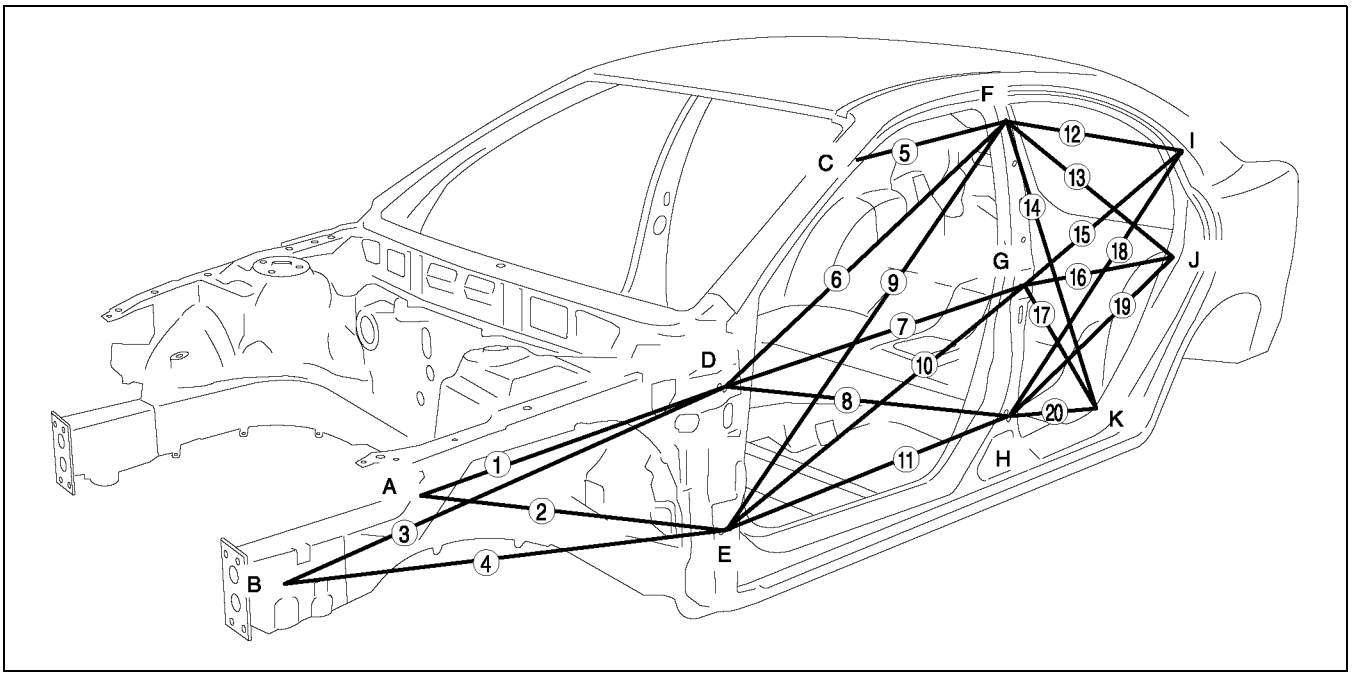

A6E9816B010

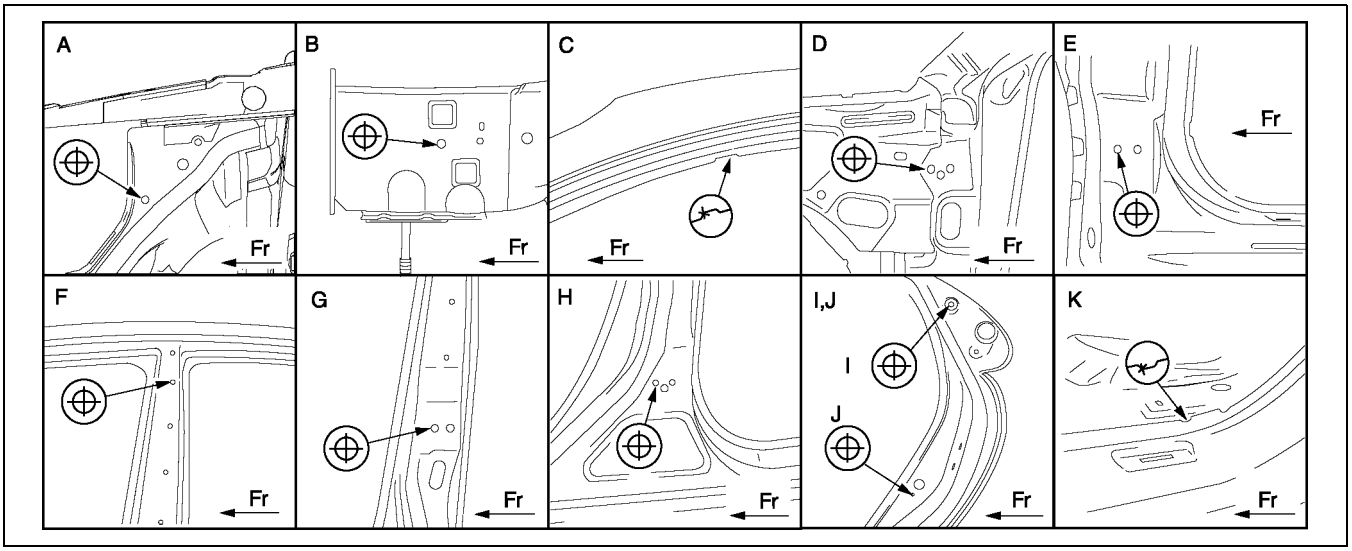

A6E9816B011

Measured location	Dimensions mm {in}
1	692 {27.24}
2	747 {29.41}
3	998 {39.29}
4	968 {38.11}
5	451 {17.76}
6	1,349 {53.11}
7	1,144 {45.04}
8	1,144 {45.04}
9	1,501 {59.09}
10	1,204 {47.40}

Measured location	Dimensions mm {in}
11	1,093 {43.03}
12	908 {35.75}
13	943 {37.13}
14	979 {38.54}
15	1,050 {41.34}
16	921 {36.26}
17	683 {26.89}
18	1,231 {48.46}
19	1,004 {39.53}
20	536 {21.10}

ROOM STRAIGHT-LINE DIMENSIONS (1)

A6E981670001B01

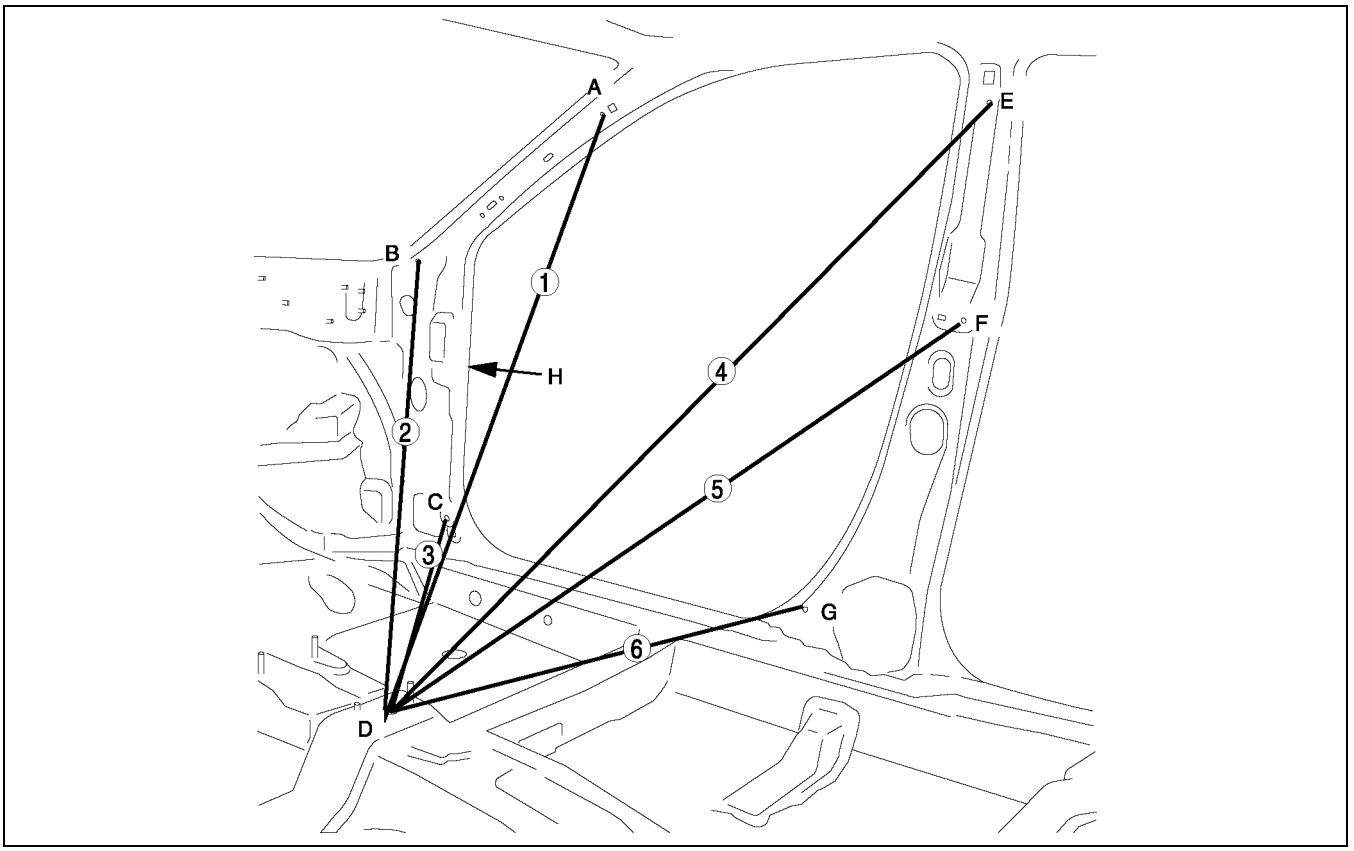

A6E9816B012

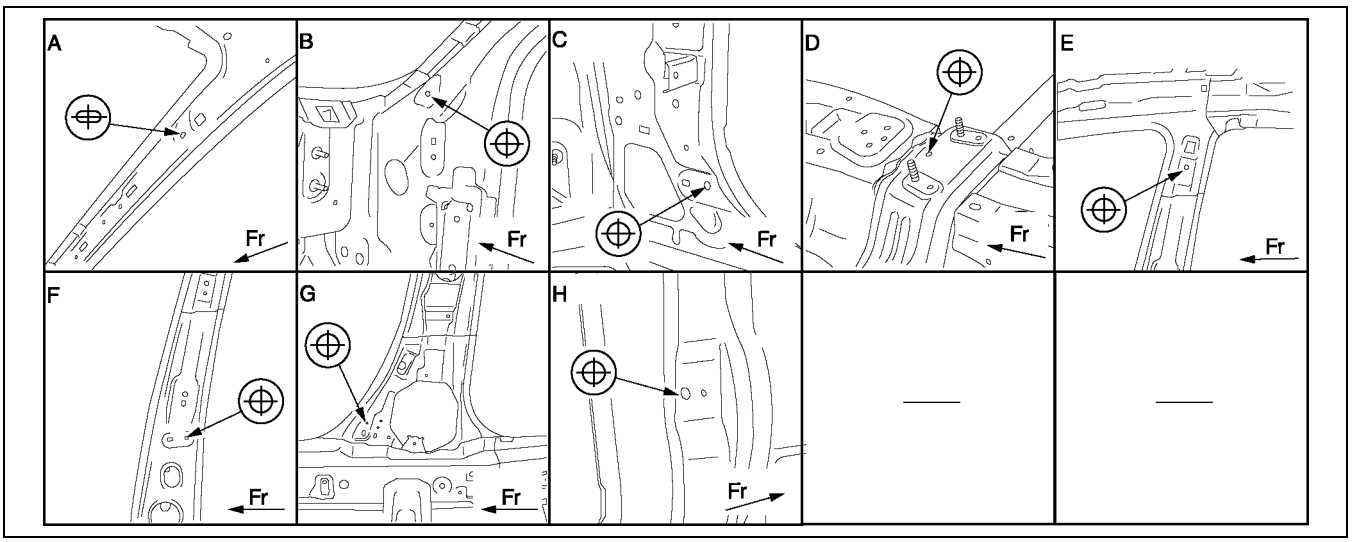

A6E9816B013

Measured location	Dimensions mm {in}
1	1,024 {40.31}
2	1,098 {43.23}
3	920 {36.22}
4	1,175 {46.26}

Measured location	Dimensions mm {in}
5	1,010 {39.76}
6	767 {30.20}
H-H’	1,487 {58.54}

ROOM STRAIGHT-LINE DIMENSIONS (2)

A6E981670001B02

SEDAN

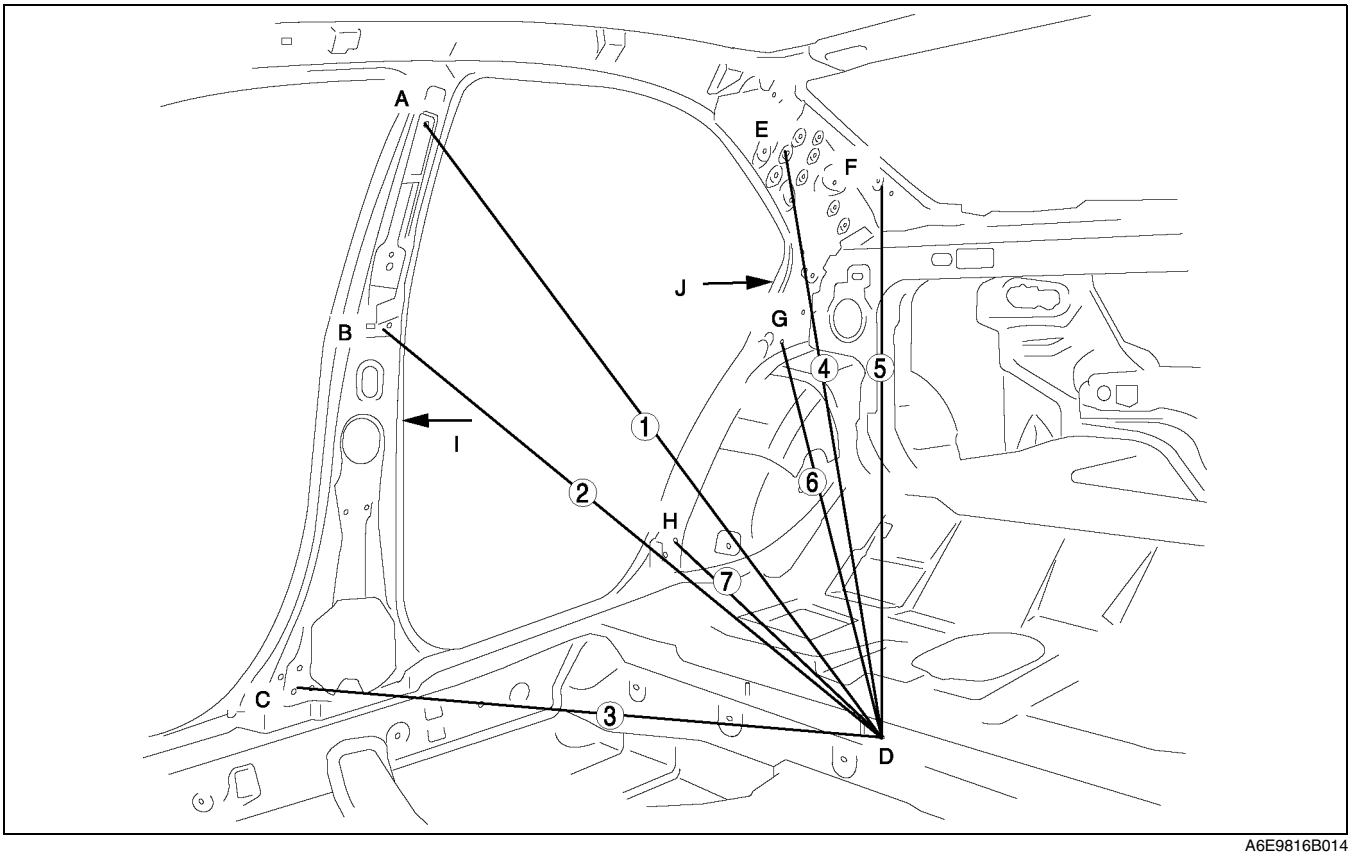

A6E9816B014

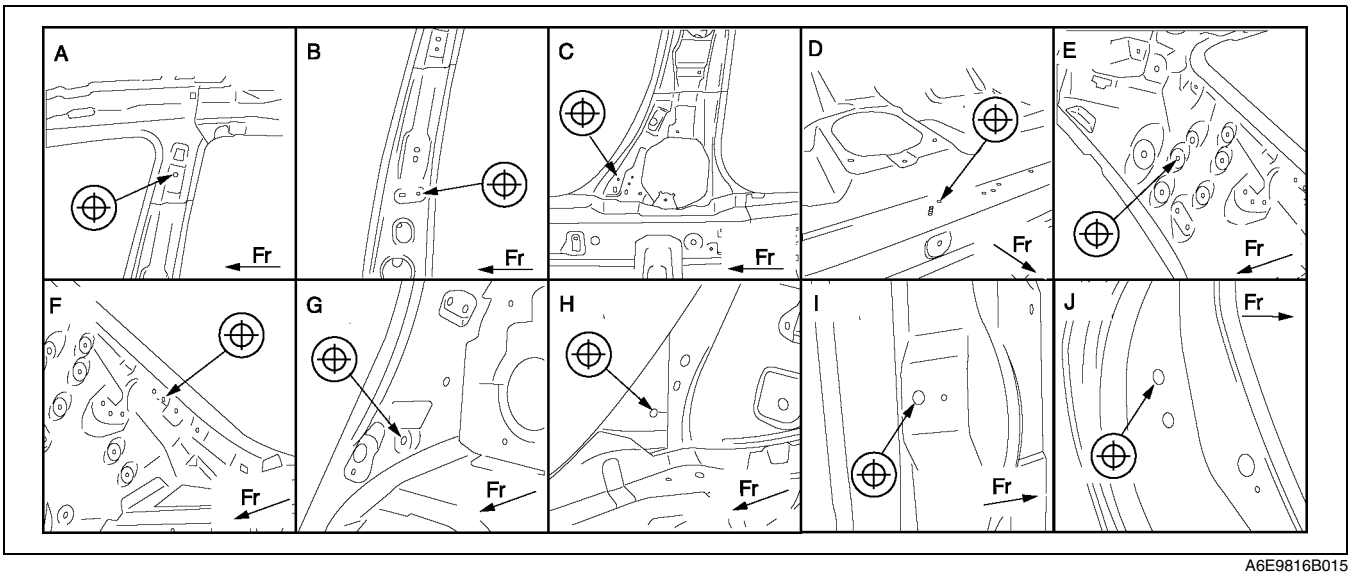

A6E9816B015

Measured location	Dimensions mm {in}
1	RH:1,141 {44.92}, LH:1,104 {43.46}
2	RH:996 {39.21}, LH:946 {37.24}
3	RH:952 {37.48}, LH:897 {35.31}
4	RH:1,193 {46.97}, LH:1,157 {45.55}
5	RH:1,285 {50.59}, LH:1,252 {49.29}

Measured location	Dimensions mm {in}
6	RH:1.079 {42.48}, LH:1,030 {40.55}
7	RH:833 {32.80}, LH:767 {30.20}
I-I’	1,584 {62.36}
J-J’	1,557 {61.30}

5HB

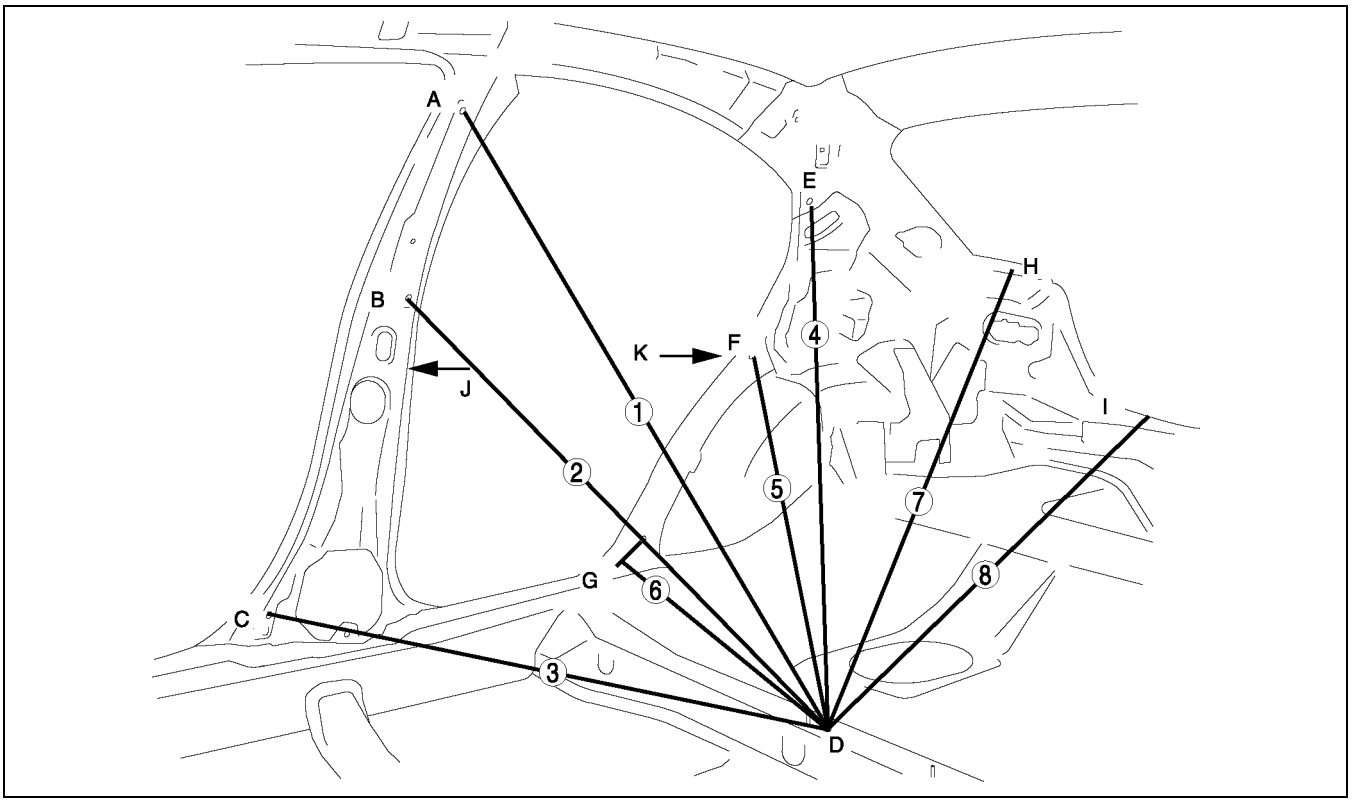

A6E9816B016

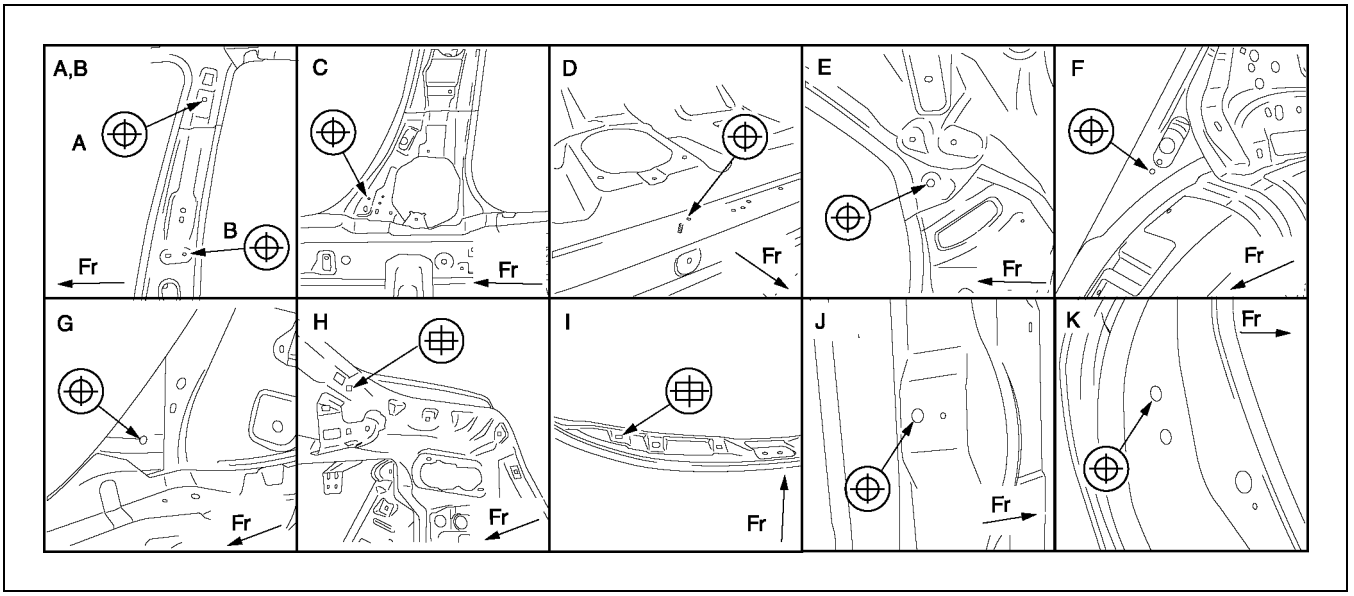

A6E9816B017

Measured location	Dimensions mm {in}
1	RH:1,141 {44.92}, LH:1,104 {43.46}
2	RH:996 {39.21}, LH:946 {37.24}
3	RH:952 {37.48}, LH:897 {35.31}
4	RH:1,204 {47.40}, LH:1,166 {45.91}
5	RH:1,027 {40.43}, LH:976 {38.43}

Measured location	Dimensions mm {in}
6	RH:833 {32.80}, LH:767 {30.20}
7	RH:1,402 {55.20}, LH:1,374 {54.09}
8	RH:1,671 {65.79}, LH:1,657 {65.24}
J-J’	1,584 {62.36}
K-K’	1,557 {61.30}

REAR BODY STRAIGHT-LINE DIMENSIONS

A6E981670002B01

SEDAN

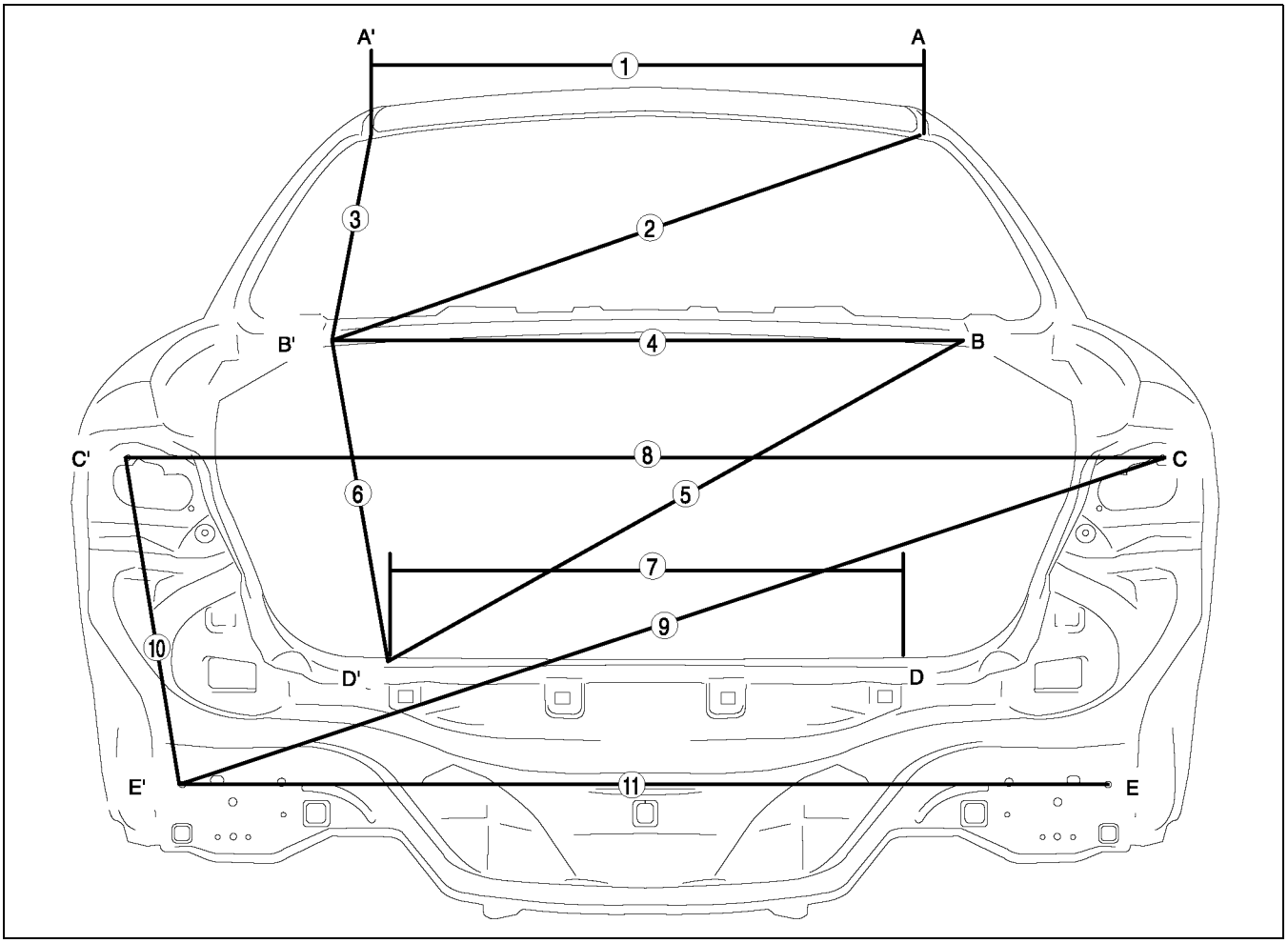

A6E9816B018

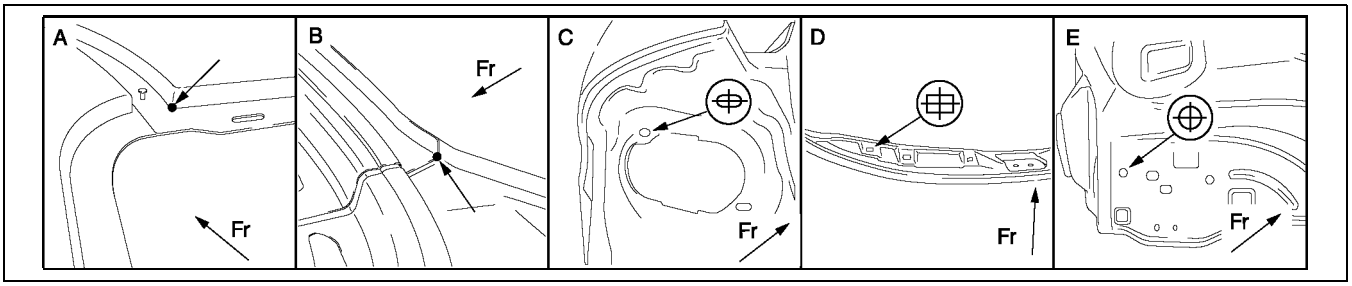

A6E9816B019

Measured location	Dimensions mm {in}
1	1,013 {39.88}
2	1,273 {50.12}
3	826 {32.52}
4	928 {36.54}
5	969 {38.15}
6	555 {21.85}

Measured location	Dimensions mm {in}
7	680 {26.77}
8	1,402 {55.20}
9	1,388 {54.65}
10	452 {17.80}
11	1,228 {48.35}

5HB

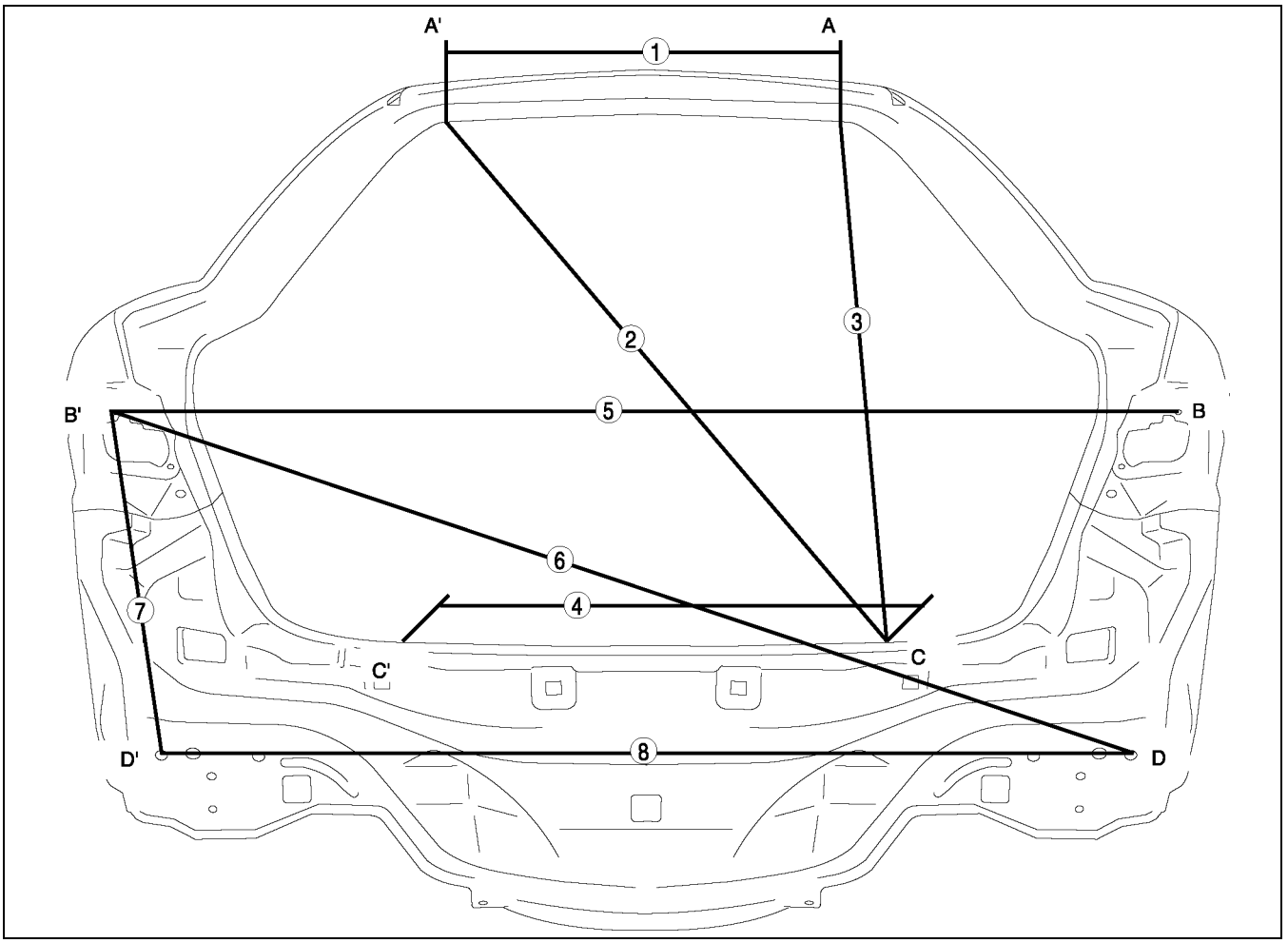

A6E9816B020

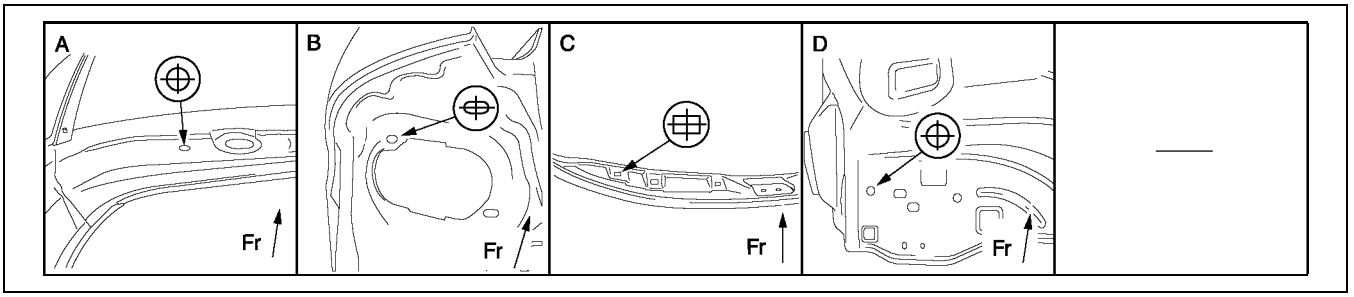

A6E9816B021

Measured location	Dimensions mm {in}
1	700 {27.56}
2	1,436 {56.54}
3	1,260 {49.61}
4	680 {26.77}

Measured location	Dimensions mm {in}
5	1,402 {55.20}
6	1,388 {54.65}
7	452 {17.80}
8	1,228 {48.35}

PLASTIC BODY PARTS

PLASTIC BODY PARTS VI-2
PLASTIC PARTS HEAT RESISTING TEMPERATURE VI-2
REPAIRABLE RANGE OF POLYPROPYLENE BUMPERS VI-3
POLYPROPYLENE BUMPER REPAIR VI-4
PROCEDURE VI-5

PLASTIC BODY PARTS

PLASTIC PARTS HEAT RESISTING TEMPERATURE

A6E981850000B01

Part Name		Code	Material Name	Heat resisting TemperatureC°{F°}
WINDSHIELD MOULDING		PVC	POLYVINYLCHLORIDE	95 {203}
COWL GRILLE		PP	POLYPROPYLENE	95 {203}
FRONT COMBINATION LIGHT	LENS	PC	POLYCARBONATE	130 {266}
	HOUSING	PBT	PBT	120 {248}
RADIATOR GRILLE	GRILLE	ABS	ABS	90 {194}
	REINFORCE-MENT	PP	POLYPROPYLENE	95 {203}
FRONT BUMPER		PP	POLYPROPYLENE	100 {212}
FRONT SIDE TURN LIGHT	LENS	PMMA	ACRYLIC	75 {167}
	HOUSING	PC-PBT	POLYPROPYLENE-PBT	120 {248}
OUTSIDE MIRROR	HOUSING	ABS	ABS	95 {200}
	BASE	PBT	PBT	200 {395}
	BLACK	AES	AES	75 {167}
	BODY COLOR	ABS	ABS	90 {194}
	MIRROR HOLDER	PP	POLYPROPYLENE	50 {122}
REAR COMBINATION LIGHT	LENS	PMMA	ACRYLIC	80 {167}
	HOUSING	AES	AES	70 {158}
REAR BUMPER		PP	POLYPROPYLENE	100 {212}
REAR FINISHER		ABS	ABS	90 {194}
HIGH-MOUNT BRAKE LIGHT(5HB)		PC	POLYCARBONATE	130 {266}
ROOF MOULDING		PVC	POLYVINYLCHLORIDE	95 {203}
BELTLINE MOLDING		PVC	POLYVINYLCHLORIDE	95 {203}
REAR SPOILER		ABS	ABS	90 {194}
SHROUD PANEL		PP	POLYPROPYLENE	100 {212}

Note

- The application of temperatures higher then heat resisting temperatures may result in part deformation.

REPAIRABLE RANGE OF POLYPROPYLENE BUMPERS

A6E981850010B01

The three types of damaged bumpers shown below are considered repairable. Although a bumper which has been damaged greater than this could also be repaired, it should be replaced with a new one because such repair would detract from the looks and quality of the bumper. In addition, such repair is not considered reasonable in terms of work time.

Repairable Bumpers

1. A bumper with a hole less than 50 mm {1.97 in} in diameter.

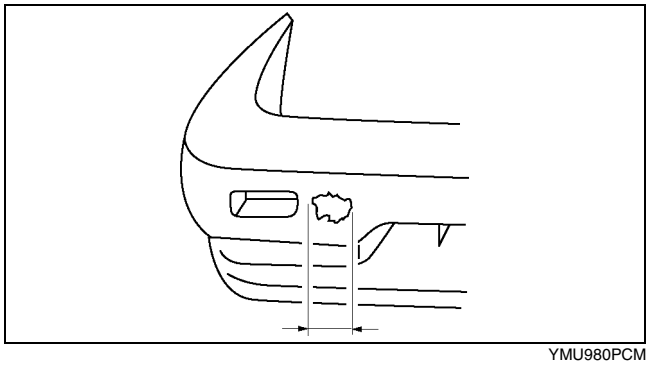

YMU980PCM

2. A bumper with a crack less than 100 mm {3.94 in} in length.

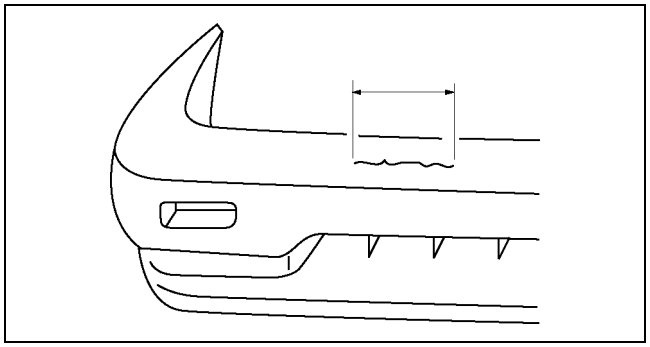

YMU980PCN

3. A bumper with a crack less than 100 mm {3.94 in} in length that is less than half of the width of the bumper.

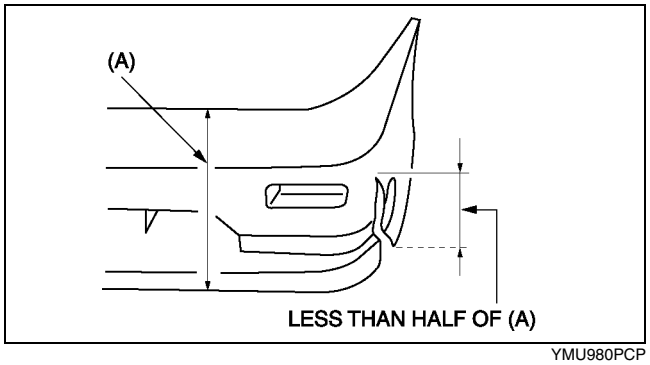

YMU980PCP

POLYPROPYLENE BUMPER REPAIR

A6E981850010B02

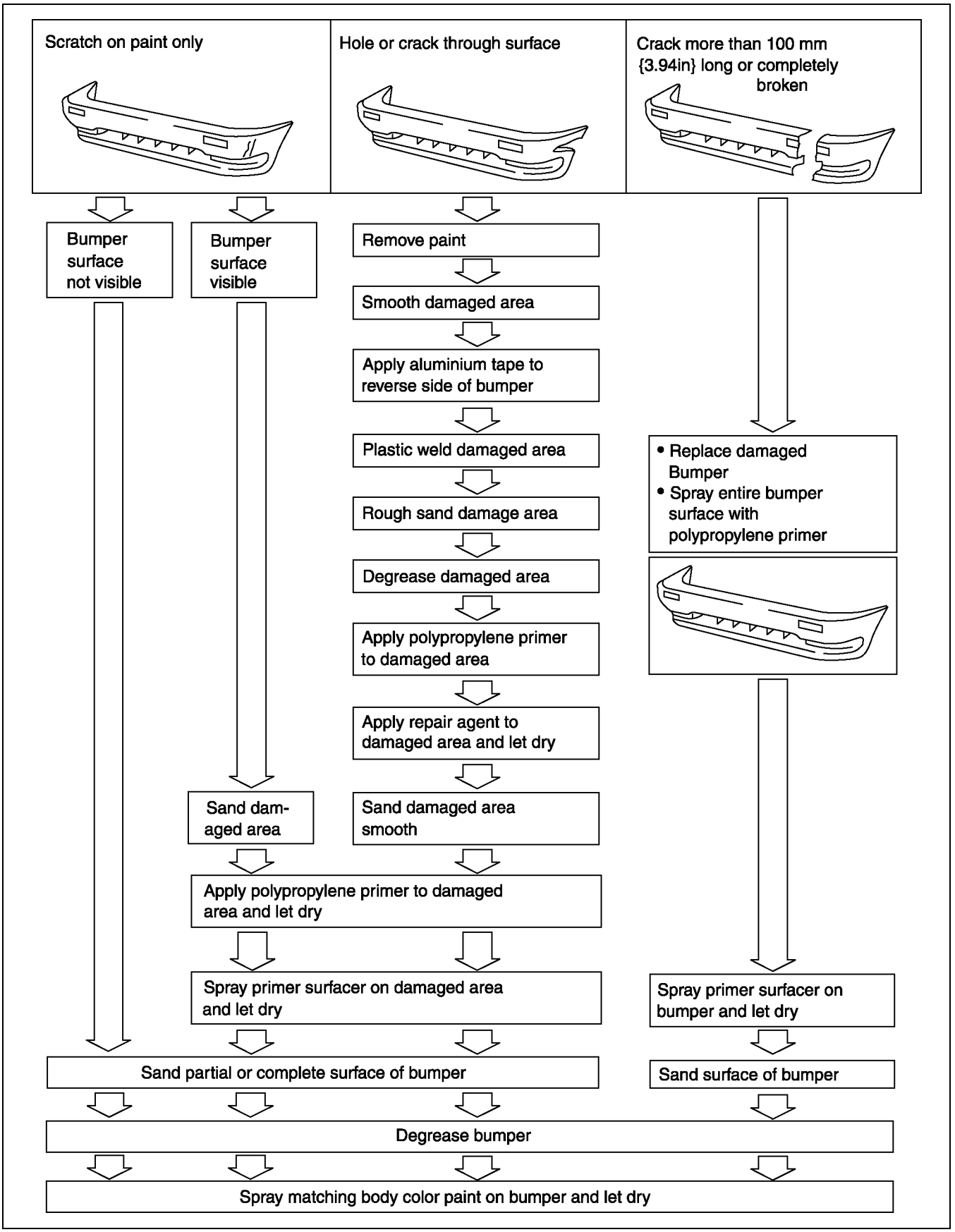

YMU980PCQ

PROCEDURE

A6E981850010B03

Repair of polypropylene bumpers having damage that has reached the surface of the polypropylene and are too serious to be restored by painting only.

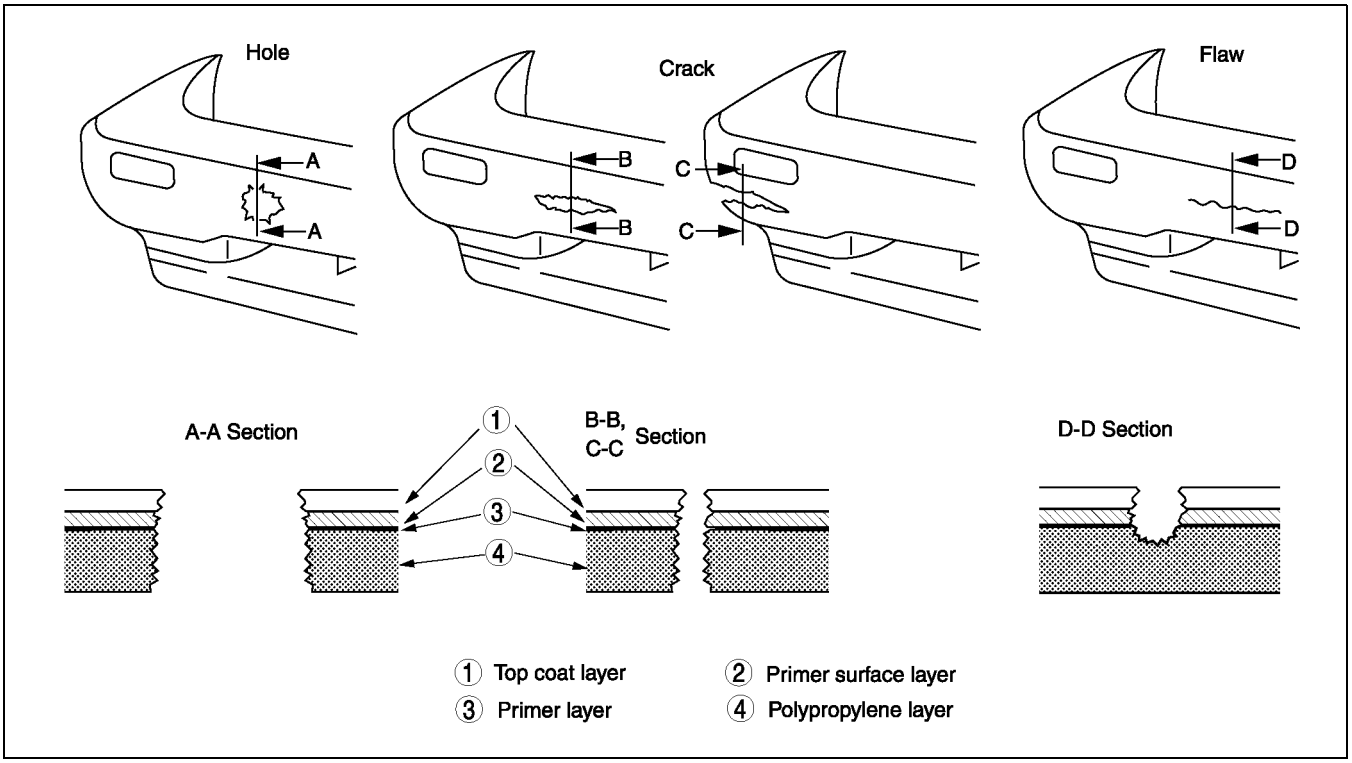

ZUA9818B001

1. Cut the rough edges around the damage with a knife to make it smooth. Sand the area with a sander to make an angle of about 45°.

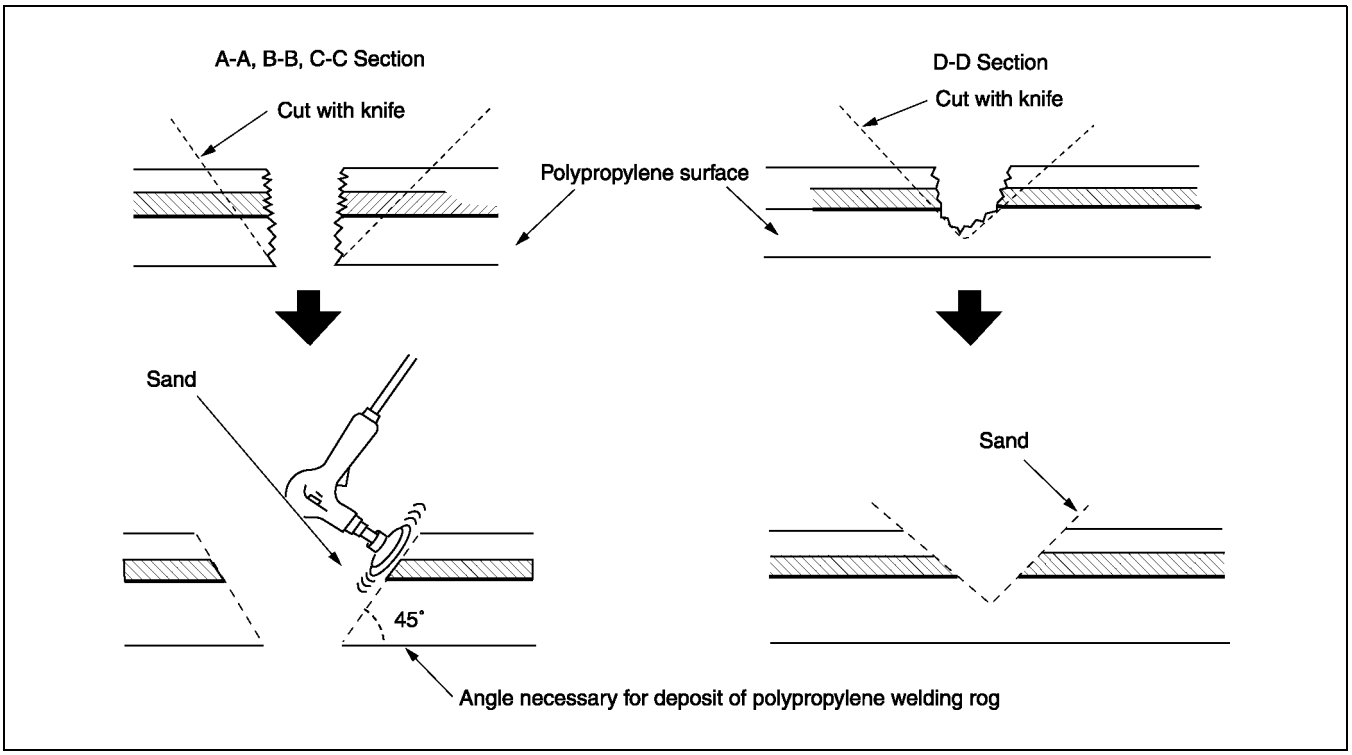

ZUA9818B002

2. Weld the damaged area.
   - For repair of a cracked area, melt the crack together with a heat gun and a melting attachment.

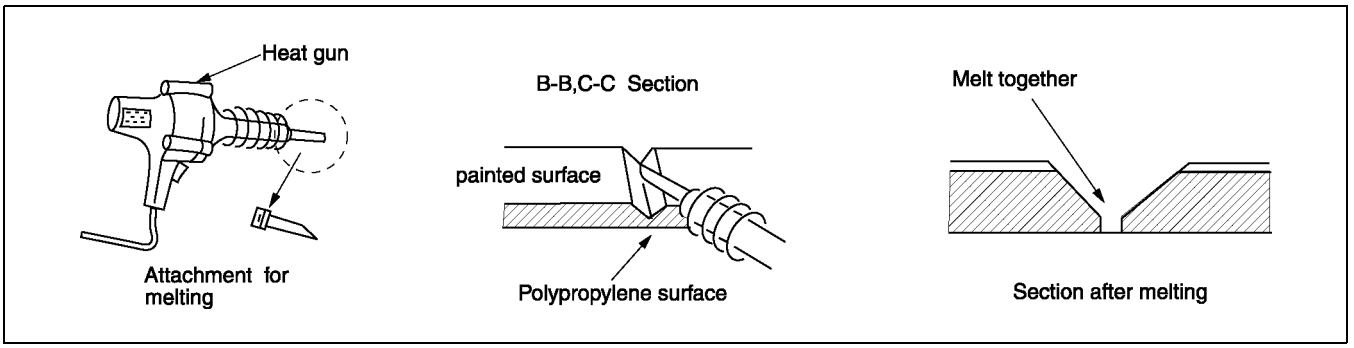

ZUA9818B003

   - For repair of a hole, degrease the area on both sides of the bumper and apply aluminium tape on the reverse side of the damage area.

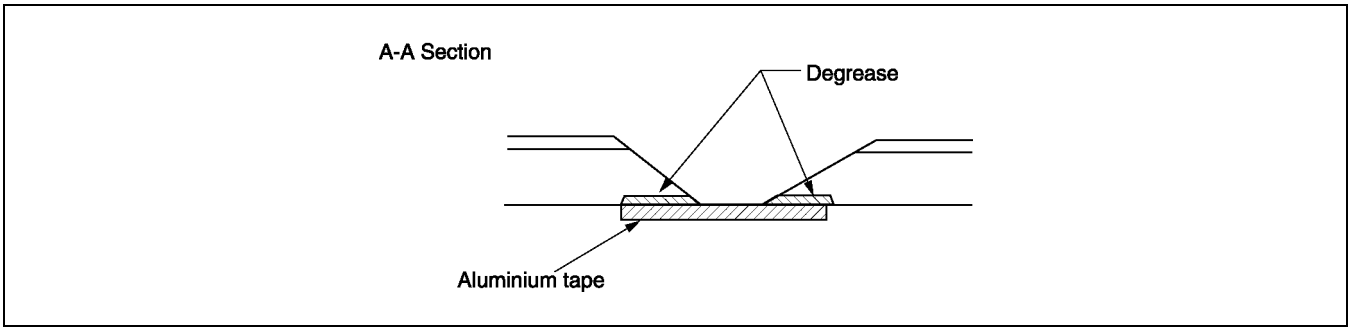

ZUA9818B005

3. Melt the polypropylene welding rod with a heat gun and deposit it the cracked area.

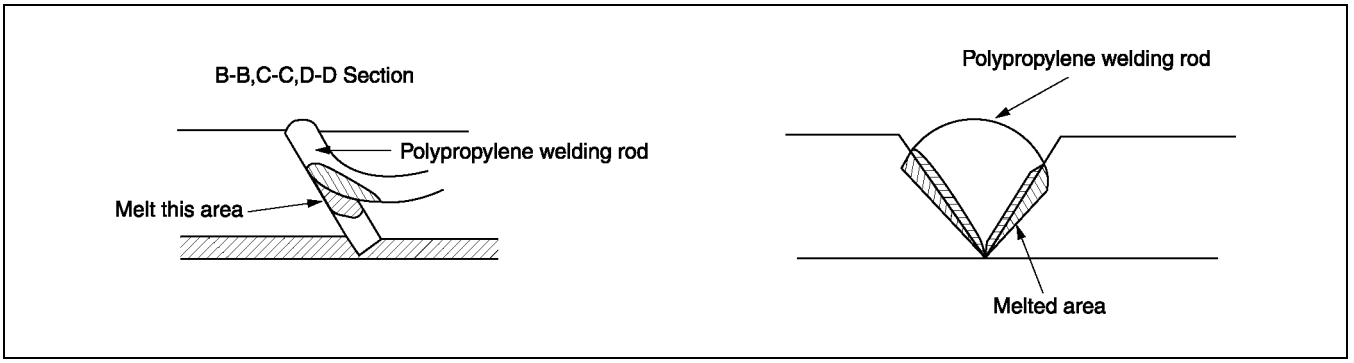

ZUA9818B004

Note
- Heat the shaded area to melt it.
- Take care not to overlay melt welding rod. If the part is welded with the welding rod melted like jelly, the welding strength will be reduced.
- Hold the heat gun 10—20 mm {0.39—0.79 in} from the part being welded.
- Do not move the welding rod until the welded parts cool.

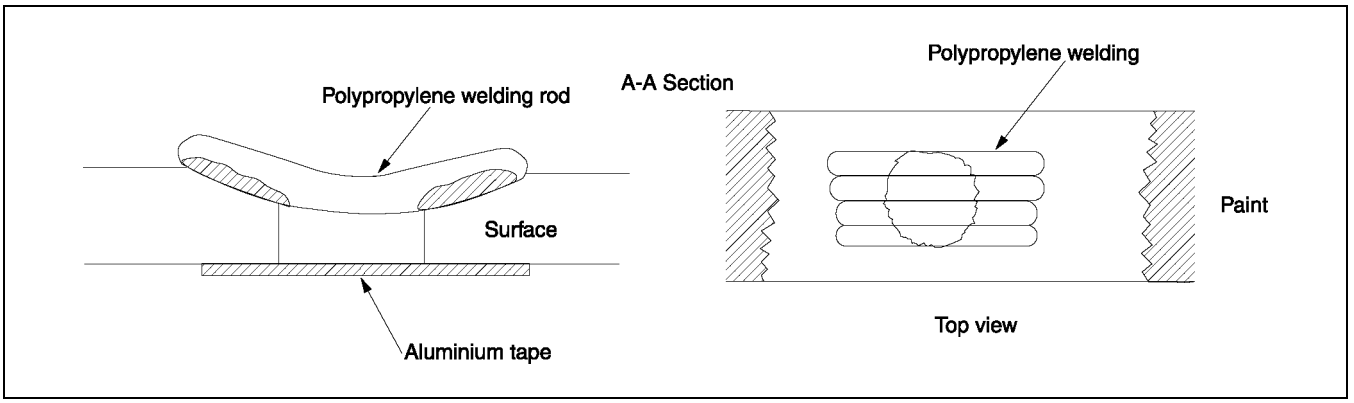

ZUA9818B006

4. Sand the surface of the polypropylene gradually as it is easily melted by the abrasion heat. Sand the area to which repair agent will be applied.

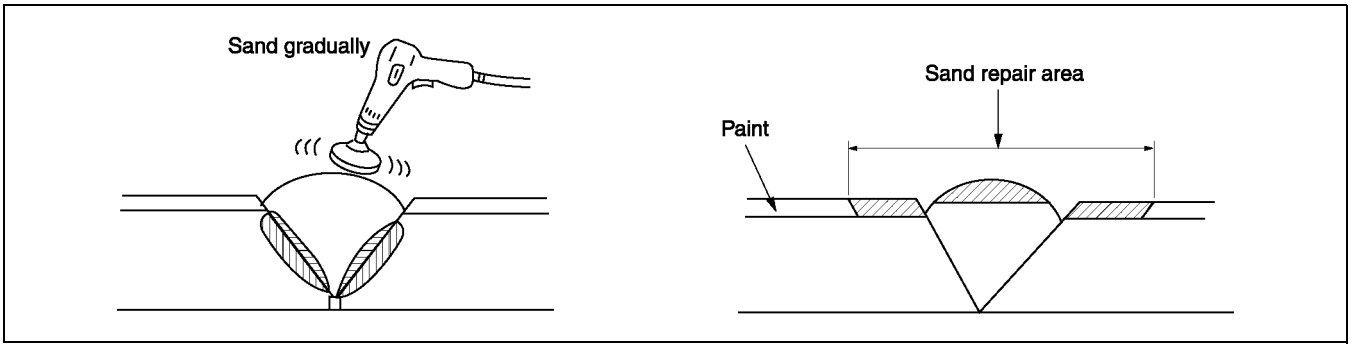

YMU980PCX

5. Uniformly apply polypropylene primer with a brush to an area larger than the repaired area. Allow to dry about 10 minutes at 20 °C {68 °F}.

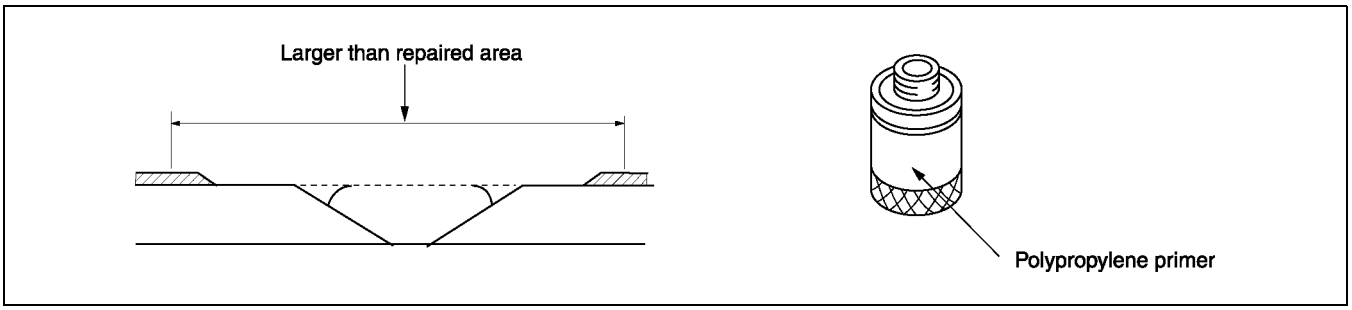

YMU980PCY

6. Mix the main agent and the stiffening agent in a ratio of one to one. Apply the mixed repair agent to the damaged area.

Note
- When mixing the main and stiffening agents, take care not to allow bubbles to form.
- The repair agent hardens quickly (about 5 minutes); proceed with the work immediately after mixing the agents.
- Allow about 30 minutes to dry (20 °C {68 °F}) before sanding.

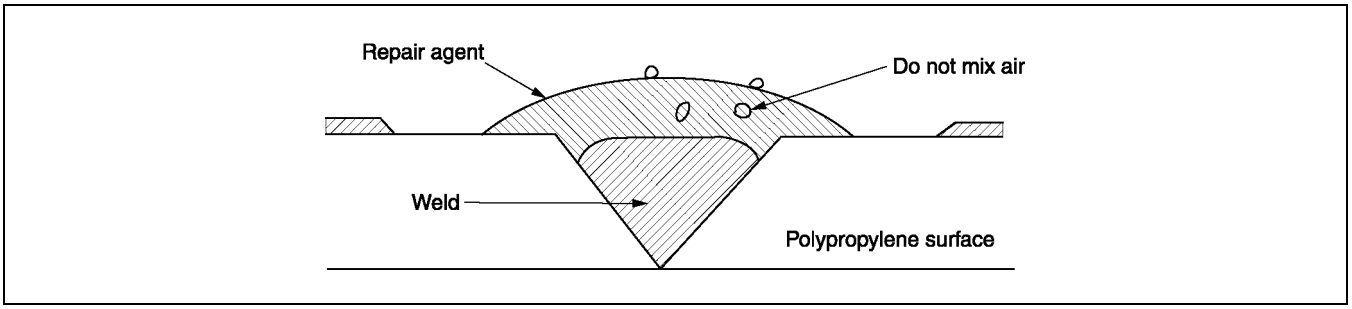

YMU980PCZ

The repair agent is a two part epoxy adhesive.
When the repair agent hardens, it will provide a good finish with the same flexibility as the polypropylens.
The repair agent for a **urethane** bumper is also a two part adhesive compound. However, this is different from that for a polypropylene bumper. If the incorrect repair agent is used, the repair will be faulty.

7. Sand the area with #180—240 sandpaper.

Note
- If excessive force is applied to the area when sanding, the surface will be damaged.
- If fuzz remains around the repaired area, melt it with a heat gun.

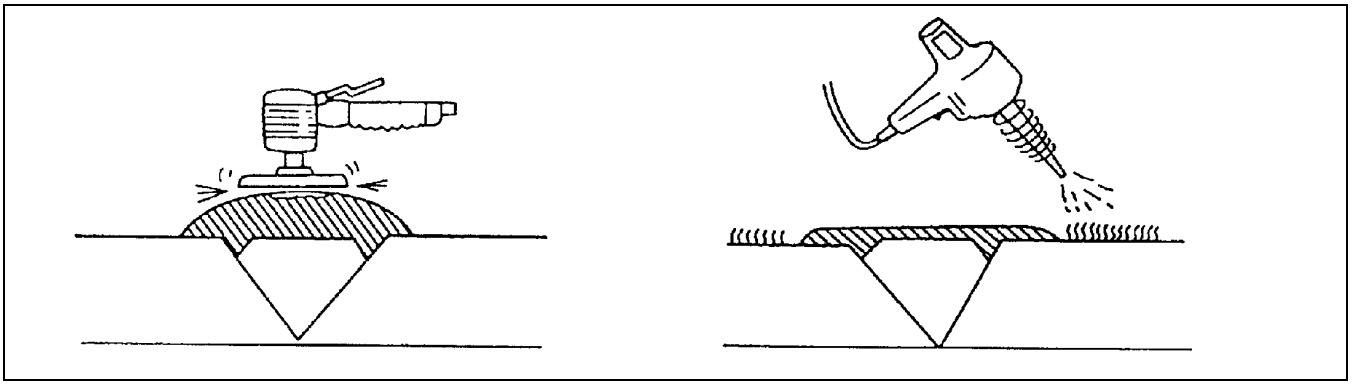

YMU980PD0

8. Degrease the painted surface.
9. Mix the primer and the hardener at a ratio of one to one. Apply the primer to the repaired area and the surface of the bumper with a brush or spray.

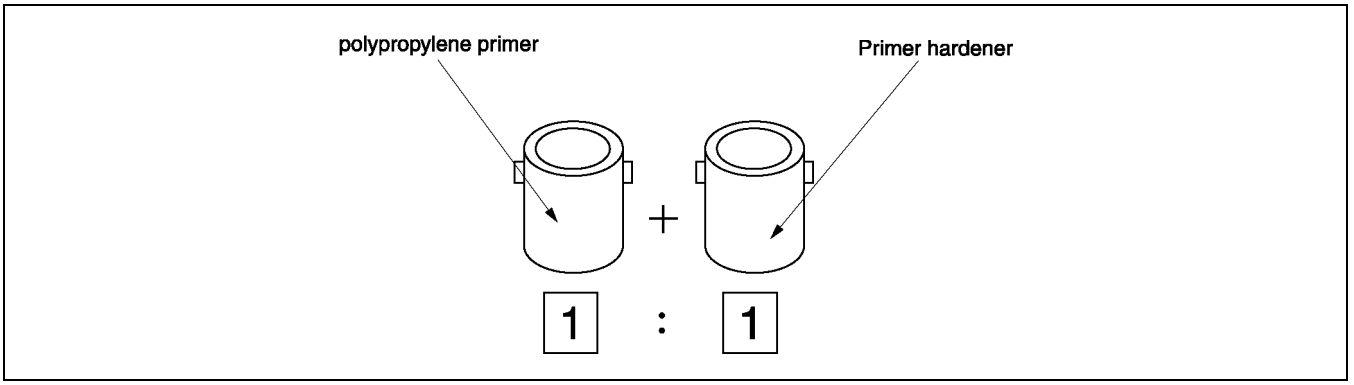

YMU980PD1

Use the primer within 16 hours after it is mixed.

Note
- Polypropylene primer will dissolve even after drying if it is wiped with solvent. Use only water to clean around the primer.

10. Allow the part to dry.

11. Add the softener to the urethane primer surfacer and spray it on the repaired area.
    a. Mixing method
       Urethane primer surfacer + Softener..... Mixture A
       Mixture A + hardener..... Mixture B
       Dilute mixture B with thinner to spray on bumper
    b. Viscosity
       14—16 seconds/viscosimeter 20 °C {68 °F}

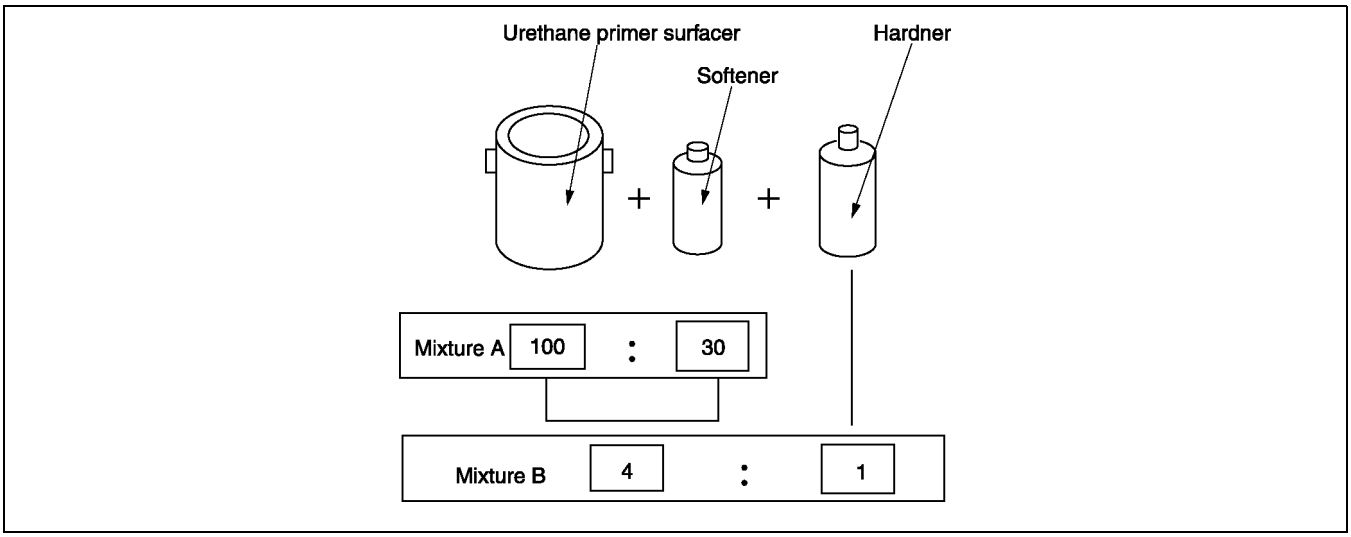

YMU980PD2

Note
- Mix the solutions at the specified ratio.

    c. Spray pressure
       300—400 kPa {3—4 kgf/cm^2, 43—57 psi}
    d. Standard film thickness
       30—40 μ
    e. Spray method
       Spot-spray primer surfacrer on bumper three of four times
12. Air drying 20 °C {68 °F} — 8 hours minimum.
    Forced drying 60 °C {140 °F} — 1 hour
13. Lightly sand the complete surface of the bumper with #400—#600 sandpaper. Do not expose the surface of the polypropylene. (Wet or dry sanding is acceptable.)
14. Wipe the complete surface of the bumper with degreasing agent. Quickly wipe the surface with a clean rag to degrease it.
15. Apply a matching coat of body color to the polypropylene bumper.

Note
- Be sure to use only urethane primer for a urethane bumper and polypropylene primer for a polypropylene bumper. Other paints for repairing a polypropylene bumper are the same as those for the urethane bumper.

16. Air drying 20 °C {68 °F} — 8 hours minimum.
    Forced drying 60 °C {140 °F} — 1 hour

Note
- Let the part air dry when possible as forced drying could cause bubbles in the top coat.

PRIMARY COLOR MIXTURE CHART FOR BODY COLORS

PRIMARY COLOR MIXTURE CHART FOR BODY COLORS VII-2
PRIMARY COLOR MIXTURE CHART FOR BODY COLORS..... VII-2

PRIMARY COLOR MIXTURE CHART FOR BODY COLORS

PRIMARY COLOR MIXTURE CHART FOR BODY COLORS

A6E982089000B01

- This is the primary color mixture chart for body colors.
- Please use the paint available in your country.
- A blank column indicates that there is no primary color available.

AKZO

- Please confirm the newest formula at the following URL.
  http://www.sikkenscr.com/sikkens/corporate/index.htm#

COLOR CODE	COLOR NAME	KIND OF PAINT		POLYXITHANE/POLYURETHANE		
		LABEL		AUTOBASE PLUS	AUTOBASE	AUTOCRYL
		INGREDIENTS		CC/CC g{oz}	CC/CC g{oz}	CC/CC g{oz}
A3E	CLASSIC RED CLE	956	VIOLET-RED TRANSPARENT			537.0 {18.94}
		559	RED OXIDE			544.2 {19.20}
		528	RED MAROON TRANSPARENT			621.4 {21.92}
		359	BRILLIANT RED		777.7 {27.43}	989.8 {34.91}
		00	WHITE		778.2 {27.45}	
		744	MIXING BLACK		781.9 {27.58}	
		538	BRIGHT MAROON TRANSPARENT		989.9 {34.92}	
A4D	ARCTIC WHITE CLE	00	WHITE		1,172.5 {41.36}	1,283.0 {45.26}
		558	LIGHT OXIDE YELLOW		1,173.9 {41.41}	
		744	MIXING BLACK		1,175.5 {41.46}	
		971	VIOLET TRANSPARENT			1,283.6 {45.28}
		904	DARK BLUE			1,284.5 {45.31}
		744	MIXING BLACK			1,286.3 {45.37}
		558	LIGHT OXIDE YELLOW			1,292.5 {45.59}
16W	BLACK MC	400	DEEP BLACK		454.3 {16.02]	
		334YA	YELLOW GOLD PALIOCROM		457.2 {16.13}	
		333DF	SILVER DOLLAR FINE		476.4 {16.80}	
		777	LIGHT GRAY TRANSPARENT		540.6 {19.07}	
		505	RED SEMI-TRANSPARENT		614.4 {21.67}	
		261	BRIGHT BLUE TRANSPARENT		958.5 {33.81}	
18J	GRACE GREEN MC	732	DARK GREEN TRANSPARENT		545.1 {19.23}	
		333M	MIXING METALLIC MEDIUM COARSE		550.9 {19.43}	
		777	LIGHT GRAY TRANSPARENT		565.6 {19.95}	
		575	BLUE TRANSPARENT		603.9 {21.30}	
		333PG	YELLOW(GOLD)PEARL -EFFECT MIXING COLOR		642.2 {22.65}	
		400	DEEP BLACK		755.6 {26.65}	
		333P	WHITE PEARL-EFFECT MIXING COLOR		870.9 {30.72}	
		952	DARK RED OXIDE TRANSPARENT		996.6 {35.15}	

PRIMARY COLOR MIXTURE CHART FOR BODY COLORS

COLOR CODE	COLOR NAME		KIND OF PAINT	POLYXITHANE/POLYURETHANE		
			LABEL	AUTOBASE PLUS	AUTOBASE	AUTOCRYL
			INGREDIENTS	CC/CC g{oz}	CC/CC g{oz}	CC/CC g{oz}
24E	SPARKLING SILVER M	333DC	SILVER DOLLAR METALLIC COARSE		479.9 {16.93}	
		952	DARK RED OXIDE TRANSPARENT		493.8 {17.42}	
		777	LIGHT GRAY		526.2 {18.56}	
		977	DARK OXIDE YELLOW		560.9 {19.78}	
		666	CORRECTION BINDER		676.8 {23.87}	
		333EC	MIXING METALLIC EXTRA COARSE		978.2 {34.50}	
25B	BLUE PACIFIC MC	261	BRIGHT BLUE TRANSPARENT		496.5 {17.51}	
		777	LIGHT GRAY		506.2 {17.86}	
		400	DEEP BLACK		537.5 {18.96}	
		333CC	MIXING METALLIC VERY COARSE		581.9 {20.53}	
		341	BLUE GREEN		630.2 {22.23}	
		971	VIOLET TRANSPARENT		724.6 {25.56}	
		333PB	BLUE PEARL-EFFECT MIXING COLOR		966.1 {34.08}	
25C	CANARY YELLOW MC		FIRST COAT			
		Q452	LIGHT YELLOW	332.9 {11.74}		
		Q235	BRILLIANT RED ORANGE TRANSPARENT	340.0 {11.99}		
		Q437	BRIGHT YELLOW OXIDE	473.5 {16.70}		
		Q455	BRIGHT YELLOW	621.7 {21.93}		
		Q110	WHITE	799.1 {28.19}		
		Q065	BINDER	1,037.8 {36.61}		
			SECOND COAT			
		Q070	TRANSPARENCY ENHANCER	357.1 {12.60}		
		Q911 H	XIRALLIC CRYSTAL SILVER	410.3 {14.47}		
		Q941 H	XIRALLIC SUNBEAM GOLD	547.0 {19.29}		
		Q190	WHITE GRAY TRANSPARENT	736.9 {25.99}		
		Q065	BINDER	957.0 {33.76}		
			FIRST COAT			
		297	LIGHT YELLOW		521.4 {18.39}	
		744	MIXING BLACK		525.2 {18.53}	
		360	RED OXIDE		542.4 {19.13}	
		361	RED YELLOW		607.0 {21.41}	
		00	WHITE		1,077.2 {38.00}	
			SECOND COAT			
		666	CORRECTION BINDER		746.4 {26.33}	
		332XS	XIRALLIC CRYSTAL SILVER		794.2 {28.01}	
		332XG	XIRALLIC SUNBEARN GOLD		861.2 {30.38}	
		777	LIGHT GRAY		956.9 {33.75}	

PRIMARY COLOR MIXTURE CHART FOR BODY COLORS

COLOR CODE	COLOR NAME		KIND OF PAINT	POLYXITHANE/POLYURETHANE		
			LABEL	AUTOBASE PLUS	AUTOBASE	AUTOCRYL
		INGREDIENTS		CC/CC g{oz}	CC/CC g{oz}	CC/CC g{oz}
25D	SNOWFLAKE WHITE PEARL MC	FIRST COAT				
		Q110	WHITE	851.9 {30.05}		
		Q437	BRIGHT YELLOW OXIDE	852.8 {30.08}		
		Q160	MIXING BLACK	854.0 {30.12}		
		Q065	BINDER	1,109.1 {39.12}		
		SECOND COAT				
		Q070	TRANSPARENCY ENHANCER	455.2 {16.06}		
		Q911 H	XIRALLIC CRYSTAL SILVER	580.1 {20.46}		
		Q190	WHITE GRAY TRANSPARENT	735.0 {25.93}		
		Q065	BINDER	954.5 {33.67}		
		FIRST COAT				
		00	WHITE		1,172.7 {41.37}	
		744	MIXING BLACK		1,174.2 {41.42}	
		558	LIGHT OXIDE YELLOW		1,175.6 {41.47}	
		SECOND COAT				
		332XS	XIRALLIC CRYSTAL SILVER		479.4 {16.91}	
		332XG	XIRALLIC SUNBEARN GOLD		527.3 {18.60}	
		777	LIGHT GRAY		647.1 {22.83}	
		666	CORRECTION BINDER		958.7 {33.82}	
25E	STRATO BLUE MC	332VA	VIOLET PEARL		390.6 {13.78}	
		777	LIGHT GRAY		401.1 {14.15}	
		956	VIOLET-RED TRANSPARENT		425.1 {14.99}	
		261	BRIGHT BLUE TRANSPARENT		507.7 {17.91}	
		333PB	BLUE PEARL-EFFECT MIXING COLOR		612.9 {21.62}	
		400	DEEP BLACK		736.1 {25.96}	
		341	BLUE GREEN		973.5 {34.34}	

PRIMARY COLOR MIXTURE CHART FOR BODY COLORS

COLOR CODE	COLOR NAME		KIND OF PAINT	POLYXITHANE/POLYURETHANE		
			LABEL	AUTOBASE PLUS	AUTOBASE	AUTOCRYL
			INGREDIENTS	CC/CC g{oz}	CC/CC g{oz}	CC/CC g{oz}
25F	GARNET RED MC	Q923 H	XIRALLIC RADIANT RED	346.6 {12.23}		
		Q231	BRILLIANT RED	361.2 {12.74}		
		Q140	DEEP BLACK	387.4 {13.66}		
		Q941 H	XIRALLIC SUNBEAM GOLD	429.7 {15.16}		
		Q271	RED MAROON TRANSPARENT	491.6 {17.34}		
		Q190	WHITE GRAY TRANSPARENT	603.2 {21.28}		
		Q726	VIOLET RED TRANSPARENT	747.4 {26.36}		
		Q065	BINDER	970.7 {34.24}		
		334XR	XIRALLIC RADIANT RED		352.2 {12.42}	
		400	DEEP BLACK		378.8 {13.36}	
		538	BRIGHT MAROON TRANSPARENT		449.2 {15.84}	
		777	LIGHT GRAY		543.1 {19.16}	
		956	VIOLET-RED TRANSPARENT		746.6 {26.34}	
		262	RED TRANSPARENT		973.5 {34.34}	
25G	TITANIUM GRAY M	333DC	SILVER DOLLAR METALLIC COARSE		409.9 {14.46}	
		777	LIGHT GRAY		429.5 {15.15}	
		261	BRIGHT BLUE TRANSPARENT		472.3 {16.66}	
		744	MIXING BLACK		639.3 {22.55}	
		333PR	RED PEARL-EFFECT MIXING COLOR		982.3 {34.65}	
25H	SILVER CONTRAIL M	333DC	SILVER DOLLAR METALLIC COARSE		965.4 {34.05}	
		777	LIGHT GRAY		967.1 {34.11}	
		101	OPAL		971.4 {34.26}	
		400	DEEP BLACK		977.8 {34.49}	
		732	DARK GREEN TRANSPARENT		986.1 {34.78}	
27A	VELOCITY RED MC		FIRST COAT			
		Q279	RED SEMI TRANSPARENT	448.2 {15.81}		
		Q065	BINDER	672.0 {23.70}		
		Q231	BRILLIANT RED	867.8 {30.61}		
		Q725	BRIGHT MAROON	970.9 {34.25}		
		Q160	MIXING BLACK	972.9 {34.32}		
			TOP COAT			
		Q190	WHITE GREY TRANSPARENT	324.1 {11.43}		
		Q065	BINDER	547.4 {19.31}		
		Q923 H	RED EFFECT	698.7 {24.65}		
		Q941 H	GOLD EFFECT	839.2 {29.60}		
		Q232	RED TRANSPARENT	904.1 {31.89}		
		Q726	VIOLET RED	958.1 {33.80}		
		Q271	RED MAROON	971.1 {34.25}		

PRIMARY COLOR MIXTURE CHART FOR BODY COLORS

COLOR CODE	COLOR NAME		KIND OF PAINT	POLYXITHANE/POLYURETHANE		
			LABEL	AUTOBASE PLUS	AUTOBASE	AUTOCRYL
			INGREDIENTS	CC/CC g{oz}	CC/CC g{oz}	CC/CC g{oz}
27C	NORDIC GREEN MC	Q065	BINDER	224.9 {7.93}		
		Q911 M	WHITE PEARL (Slight coarseness)	432.7 {15.26}		
		Q911 H	SILVER EFFECT	606.6 {21.40}		
		Q140	DEEP BLACK	763.6 {26.93}		
		Q190	WHITE GREY TRANSPARENT	863.6 {30.46}		
		Q652	BLUE GREEN	944.4 {33.31}		
		Q678	BLUE VIORET	975.2 {34.40}		
		Q348	ORANGE YELLOW	977.5 {34.48}		
29Y	TITANIUM GRAY II M	Q811J	METALLIC SPARKLING (Medium coarseness)	311.2 {10.98}		
		Q239	RED OXIDE	321.8 {11.35}		
		Q726	VIOLET RED TRANSPARENT	352.2 {12.42}		
		Q673	BRIGHT BLUE	390.9 {13.79}		
		Q140	DEEP BLACK	466.8 {16.47}		
		Q190	WHITE GRAY TRANSPARENT	569.3 {20.08}		
		Q811 M	METALLIC SPARKLING (Slight coarseness)	759.1 {26.78}		
		Q065	BINDER	985.9 {34.78}		

E.I.du pont de nemours &Co.(Inc.)

- Please confirm the newest formula at the following URL.
  http://www.dupont.com/finishes/eu

COLOR CODE	COLOR NAME		KIND OF PAINT	POLYXITHANE/POLYURETHANE		
			LABEL	CRONAR	CRONAR	-
			INGREDIENTS	CENTARI 6000 g{oz}	CENTARI 600 g{oz}	CENTARI 500 g{oz}
A3E	CLASSIC RED CLE	AM 64	MAGENTA	240.4 {8.48}	184.1 {6.49}	
		AM 50	BRILLIANT RED	440.7 {15.54}	337.4 {11.90}	
		AM 66	RED VIOLET	460.7 {16.25}	352.8 {12.44}	
		AM 150	BINDER		935.6 {33.00}	
		XB 155	M.S. BINDER	950.4 {33.52}		
A4D	ARCTIC WHITE CLE	AM1	WHITE H.S.	663.9 {23.42}	622.3 {21.95}	
		AM7	BLACK L.S.	677.4 {23.89}	635.0 {22.40}	
		AM82	YELLOW OXIDE L.S.	679.3 {23.96}	636.8 {22.46}	
		AB 150	B/C BALANCER		1,167.0 {41.16}	
		XB 155	M.S. BINDER	1,187.8 {41.90}		
16W	BLACK MC	AM6	BLACK H.S.		174.4 {6.15}	
		4530S	FLOP CONTROL AGENT		252.9 {8.92}	
		AM14	COARSE ALUMINIUM		255.1 {9.00}	
		AM74	BLUE PEARL		263.6 {9.30}	
		AB150	B/C BALANCER		772.8 {27.26}	
		1B160	BINDER		925.6 {32.65}	
18J	GRACE GREEN MC	AM27	TRANSPARENT BLUE	94.9 {3.35}		
		AM32	GREEN	170.5 {6.01}		
		AM5	JET BLACK	235.6 {8.31}		
		4530S	FLOP CONTROL AGENT	287.4 {10.14}		
		AM75	SUPER GREEN PEARL	326.2 {11.51}		
		AM76	GOLD PEARL	341.8 {12.06}		
		XB155	M.S. BINDER	715.5 {25.24}		
		XB165	M.S. BINDER	950.2 {33.52}		
24E	SPARKLING SILVER M	AM95	BR COARSE ALUMINIUM	127.6 {4.50}	110.2 {3.89}	
		AM11	MEDIUM ALUMINIUM	185.8 {6.55}	160.4 {5.66}	
		AM90	TRANSOXIDE YELLOW	206.9 {7.30}	178.7 {6.30}	
		AM91	TRANSOXIDE RED	214.4 {7.56}	185.2 {6.53}	
		AM2	WHITE L.S.	219.3 {7.74}	189.4 {6.68}	
		AM5	JET BLACK	221.8 {7.82}	191.5 {6.75}	
		AB150	B/C BALANCER		546.6 {19.28}	
		AB160	BINDER		945.5 {33.35}	
		XB155	M.S. BINDER	436.5 {15.40}		
		XB165	M.S. BINDER	958.0 {33.79}		
25B	BLUE PACIFIC MC	AM27	TRANSPARENT BLUE	239.0 {8.43}	194.6 {6.86}	
		AM74	BLUE PEARL	347.8 {12.27}	283.2 {9.99}	
		AM62	TRANSPARENT RED	422.6 {14.91}	344.1 {12.14}	
		4530S	FLOP CONTROL AGENT	466.0 {16.44}	379.4 {13.38}	
		AM29	LIGHT BLUE	484.7 {17.10}	394.6 {13.92}	
		AM5	JET BLACK	500.6 {17.66}	407.6 {14.38}	
		AM17	BRIGHT-FINE ALUMINIUM	503.1 {17.75}	409.5 {14.44}	
		AB 150	B/C BALANCER		941.3 {33.20}	
		XB 155	M.S. BINDER	952.3 {33.59}		
25C	CANARY YELLOW MC	DuPont is able to provide the specialized CANARY YELLOW MC color as a ready-to-use product. (The mixing formula is under development.)				

PRIMARY COLOR MIXTURE CHART FOR BODY COLORS

COLOR CODE	COLOR NAME		KIND OF PAINT	POLYXITHANE/POLYURETHANE		
			LABEL	CRONAR	CRONAR	-
		INGREDIENTS		CENTARI 6000 g{oz}	CENTARI 600 g{oz}	CENTARI 500 g{oz}
25D	SNOWFLAKE WHITE PEARL MC COLOR BASE	AM1	WHITE H.S.		655.7 {23.13}	
		AB150	B/C BALANCER		1,186.9 {41.87}	
	SNOWFLAKE WHITE PEARL MC PEARL BASE	M8819	SILVER CRYSTAL (FAC PAC)		844.7 {29.80}	
		4530S	FLOP CONTROL AGENT		930.9 {32.84}	
		AM2	WHITE L.S.		936.9 {33.05}	
		AM7	BLACK L.S.		937.9 {33.08}	
		AM70	FAST BLUE L.S.		938.3 {33.10}	
25E	STRATO BLUE MC	AM27	TRANSPARENT BLUE	144.2 {5.09}	116.5 {4.11}	
		AM79	VIOLET PEARL	243.1 {8.57}	196.5 {6.93}	
		AM74	BLUE PEARL	314.2 {11.08}	253.9 {8.96}	
		AM5	JET BLACK	376.3 {13.27}	304.1 {10.73}	
		AM20	VIOLET	432.9 {15.27}	349.8 {12.34}	
		AM66	RED VIOLET	485.1 {17.11}	392.0 {13.83}	
		AB 150	B/C BALANCER		948.9 {33.47}	
		XB 155	M.S. BINDER	962.3 {33.94}		
25F	GARNET RED MC	DuPont is able to provide the specialized GARNET RED MC color as a ready-to-use product. (The mixing formula is under development).				
25G	TITANIUM GRAY M	AM95	BR COARSE ALUMINIUM	89.6 {3.16}	83.6 {2.95}	
		AM5	JET BLACK	140.6 {4.96}	131.1 {4.62}	
		AM28	FAST BLUE H.S.	157.4 {5.55}	146.8 {5.18}	
		AM20	VIOLET	171.5 {6.05}	159.9 {5.64}	
		AM84	RED OXIDE L.S.	184.9 {6.52}	172.5 {6.08}	
		AM2	WHITE L.S.	197.2 {6.96}	183.9 {6.49}	
		AB 150	B/C BALANCER		597.3 {21.07}	
		AB 160	BINDER		933.8 {32.94}	
		XB 155	M.S. BINDER	424.6 {14.98}		
		XB 165	M.S. BINDER	943.5 {33.28}		
25H	SILVER CONTRAIL M	AM95	BR COARSE ALUMINIUM	155.2 {5.47}	131.8 {4.65}	
		4530S	FLOP CONTROL AGENT	172.4 {6.08}	146.5 {5.17}	
		AM31	FIRST GREEN L.S.	189.0 {6.67}	160.6 {5.66}	
		AM70	FAST BLUE L.S.	203.3 {7.17}	172.7 {6.09}	
		AM2	WHITE L.S.	211.7 {7.47}	179.8 {6.34}	
		AM5	JET BLACK	215.3 {7.59}	182.9 {6.45}	
		AB 150	B/C BALANCER		571.2 {20.15}	
		AB 160	BINDER		938.1 {33.09}	
		XB 155	M.S. BINDER	449.8 {15.87}		
		XB 165	M.S. BINDER	950.1 {33.51}		

PRIMARY COLOR MIXTURE CHART FOR BODY COLORS

COLOR CODE	COLOR NAME		KIND OF PAINT	POLYXITHANE/POLYURETHANE		
			LABEL	AUTOBASE PLUS	AUTOBASE	AUTOCRYL
			INGREDIENTS	CC/CC g{oz}	CC/CC g{oz}	CC/CC g{oz}
27A	VELOCITY RED MC UNDERCOAT	AM50	BRILLIANT RED	170.4 {6.01}		
		AM64	MAGENTA	335.7 {11.84}		
		AM53	RED ORANGE	419.2 {14.79}		
		AM66	RED VIOLET	457.6 {16.14}		
		AM7	BLACK L.S.	469.4 {16.56}		
		XB155	M.S.BINDER	956.3 {33.73}		
	VELOCITY RED MC BASECOAT	AM62	TRANSPARENT RED	145.3 {5.13}		
		AM86	OPEC RED	188.2 {6.64}		
		AM75 2	RADIANT RED EFX	210.1 {7.41}		
		AM7	BLACK L.S.	227.8 {8.04}		
		AM50	BRILLIANT RED	240.4 {8.48}		
		AM76 5	SUNBEAM GOLD EFX	249.7 {8.81}		
		XB155	M.S.BINDER	514.4 {18.14}		
		XB165	M.S. BINDER	941.9 {33.22}		
27C	NORDIC GREEN MC	AM5	JET BLACK	74.0 {2.61}	62.1 {2.19}	
		AM27	BLUE	128.8 {4.54}	108.1 {3.81}	
		4530S	FLOP CONTROL AGENT	182.1 {6.42}	152.8 {5.39}	
		AM73 5	CRYSTAL WHITE EFX	232.6 {8.20}	195.2 {6.89}	
		AM76	GOLD PEARL	235.1 {8.29}	197.3 {6.96}	
		AB 150	B/C BALANCER		633.1 {22.33}	
		AB 160	BINDER		933.5 {32.93}	
		XB155	M.S. BINDER	501.7 {17.70}		
		XB165	M.S. BINDER	944.2 {33.31}		
29Y	TITANIUM GRAY II M	AM95	BRIGHT COARSE ALUMINIUM	61.2 {2.16}	54.9 {1.94}	
		4530S	FLOP CONTROR AGENT	116.3 {4.10}	104.3 {3.68}	
		AM70	FAST BLUE L.S.		138.4 {4.88}	
		AM5	JET BLACK	148.4 {5.23}	167.2 {5.90}	
		AM64	MAGENTA	167.7 {5.92}	184.5 {6.51}	
		AM84	RED OXIDE L.S.	184.0 {6.49}	199.1 {7.02}	
		AM27	BLUE	198.3 {6.99}	211.9 {7.47}	
		AM28	FAST BLUE H.S.	202.2 {7.13}		
		AB150	BINDER(LMC)		614.9 {21.69}	
		AB160	BINDER(HMC)		934.7 {32.97}	
		XB155	M.S.BINDER	432.3 {15.25}		
		XB165	M.S.BINDER	943.1 {33.27}		

STANDOX

- Please confirm the newest formula at the following URL.
  http://www.standox.com

COLOR CODE	COLOR NAME	KIND OF PAINT	POLYURETHANE
		LABEL	STANDOX
		MIXING No.	CC/CC g{oz}
A3E	CLASSIC RED CLE	861	526.0 {18.55}
		566	714.9 {25.22}
		576	899.9 {31.74}
		564	939.4 {33.14}
A4D	ARCTIC WHITE CLE	870	1,120.9 {39.54}
		564	1,140.3 {40.22}
		574	1,141.9 {40.28}
16W	BLACK MC	571	716.5 {25.27}
		803	789.6 {27.85}
		008	856.2 {30.20}
		811	897.0 {31.64}
		859	918.2 {32.39}
		823	921.9 {32.52}
		570	925.6 {32.65}
18J	GRACE GREEN MC	571	262.6 {9.26}
		573	690.2 {24.35}
		823	764.3 {26.96}
		824	844.9 {29.80}
		008	868.4 {30.63}
		588	924.7 {32.62}
		802	937.9 {33.08}
24E	SPARKLING SILVER M	590	302.2 {10.66}
		811	836.2 {29.50}
		008	870.9 {30.72}
		581	924.6 {32.61}
		582	937.9 {33.08}
		571	941.7 {33.22}
25B	BLUE PACIFIC MC	859	673.3 {23.75}
		853	808.0 {28.50}
		825	905.7 {31.95}
		812	922.5 {32.54}
		563	936.0 {33.02}
25C	CANARY YELLOW MC	Please contact the STANDOX office for the formula.	
25D	SNOWFLAKE WHITE PEARL MC	599	748.5 {26.40}
		801	873.2 {30.80}
		802	898.2 {31.68}
		008	939.8 {33.15}
		570	943.9 {33.29}
	GROUND	570	1,032.5 {36.42}
		564	1,053.6 {37.16}
		581	1,054.7 {37.20}
25E	STRATO BLUE MC	853	271.8 {9.59}
		825	482.7 {17.03}
		571	685.3 {24.17}
		821	795.0 {28.04}
		859	872.6 {30.78}
		569	945.2 {33.34}
25F	GARNET RED MC	Please contact the STANDOX office for the formula.	

PRIMARY COLOR MIXTURE CHART FOR BODY COLORS

COLOR CODE	COLOR NAME	KIND OF PAINT	POLYURETHANE
		LABEL	STANDOX
		MIXING No.	CC/CC g{oz}
25G	TITANIUM GRAY M	811	477.5 {16.84}
		593	716.3 {25.27}
		571	823.7 {29.05}
		585	888.2 {31.33}
		569	912.1 {32.17}
		008	924.0 {32.59}
		567	933.6 {32.93}
25H	SILVER CONTRAIL M	593	505.1 {17.82}
		811	926.0 {32.66}
		589	932.3 {32.89}
		571	934.4 {32.96}
27A	VELOCITY RED MC	Please contact the STANDOX office for the formula.	
27C	NORDIC GREEN MC	826	343.4 {12.11}
		854	757.4 {26.72}
		859	904.3 {31.90}
		823	944.4 {33.31}
		008	955.8 {33.71}
29Y	TITANIUM GRAY II M	811	382.9 {13.51}
		812	608.2 {21.45}
		571	735.4 {25.94}
		581	794.1 {28.01}
		008	843.9 {29.77}
		562	882.5 {31.13}
		855	912.0 {32.17}
		561	939.7 {33.15}

SPIES HACKER

- Please confirm the newest formula at the following URL.
  http://www.spieshecker.com

COLOR CODE	COLOR NAME	KIND OF PAINT	POLYURETHANE
		LABEL	PERMACRON
		INGREDIENTS	g{oz}
A3E	CLASSIC RED CLE	MB 544	528.2 {18.63}
		MB 536	717.7 {25.32}
		MB 529	903.5 {31.87}
		MB 525	943.2 {33.27}
A4D	ARCTIC WHITE	MB 511	1,123.1 {39.62}
		MB 525	1,142.6 {40.30}
		MB 505	1,144.2 {40.36}
16W	BLACK MC	MB 502	713.7 {25.17}
		MB 799	780.1 {27.52}
		MB 558	814.8 {28.74}
		MB 593	853.0 {30.09}
		MB 554	874.2 {30.84}
		MB 501	918.5 {32.40}
		MB 561	922.2 {32.53}
18J	GRACE GREEN MC	MB 522	429.4 {15.15}
		MB 502	693.0 {24.44}
		MB 572	774.0 {27.30}
		MB 561	848.3 {29.92}
		MB 553	904.8 {31.92}
		MB 799	928.3 {32.74}
		MB 592	941.5 {33.21}
24E	SPARKLING SILVER M	MB 558	532.9 {18.80}
		MB 514	834.5 {29.44}
		MB 532	888.1 {31.33}
		MB 799	922.8 {32.55}
		MB 531	936.0 {33.02}
		MB 502	939.8 {33.15}
25B	BLUE PACIFIC MC	MB 554	672.0 {23.70}
		MB 546	806.4 {28.44}
		MB 563	903.9 {31.88}
		MB 557	920.7 {32.48}
		MB 527	934.1 {32.95}
25C	CANARY YELLOW MC	Please contact the SPIES HECKER office for the formula.	
25D	SNOWFLAKE WHITE PEARL MC	MB 299	747.0 {26.35}
		MB 591	871.5 {30.74}
		MB 799	913.0 {32.20}
		MB 592	937.9 {33.08}
		MB 501	942.0 {33.23}
	GROUND	MB 501	1,036.7 {36.57}
		MB 525	1,057.8 {37.31}
		MB 532	1,058.9 {37.35}
25E	STRATO BLUE MC	MB 546	272.3 {9.60}
		MB 563	483.7 {17.06}
		MB 502	686.7 {24.22}
		MB 568	796.6 {28.10}
		MB 554	874.3 {30.84}
		MB 520	947.1 {33.41}
25F	GARNET RED MC	Please contact the SPIES HECKER office for the formula.	

PRIMARY COLOR MIXTURE CHART FOR BODY COLORS

COLOR CODE	COLOR NAME	KIND OF PAINT	POLYURETHANE
		LABEL	PERMACRON
		INGREDIENTS	g{oz}
25G	TITANIUM GRAY M	MB 558	487.5 {17.20}
		MB 513	717.7 {25.32}
		MB 502	825.3 {29.11}
		MB 552	890.0 {31.39}
		MB 520	913.9 {32.24}
		MB 799	925.8 {32.66}
		MB 506	935.5 {33.00}
25H	SILVER CONTRAIL M	MB 513	504.1 {17.78}
		MB 558	924.1 {32.60}
		MB 538	930.4 {32.82}
		MB 502	932.5 {32.89}
27A	VELOCITY RED MC	Please contact the SPIES HECKER office for the formula.	
27C	NORDIC GREEN MC	MB 574	412.4 {14.55}
		MB 596	754.4 {26.61}
		MB 554	900.7 {31.77}
		MB 561	940.6 {33.18}
		MB 799	952.0 {33.58}
29Y	TITANIUM GRAY II M	MB 558	384.5 {13.56}
		MB 557	610.8 {21.54}
		MB 532	669.7 {23.62}
		MB 502	797.5 {28.13}
		MB 799	847.5 {29.89}
		MB 555	886.3 {31.26}
		MB 556	916.0 {32.31}
		MB 543	943.9 {33.29}

PRIMARY COLOR MIXTURE CHART FOR BODY COLORS

Nexa Autocolor

- Please confirm the newest formula at the following URL.
  http://www.iciautocolor.com

COLOR CODE	COLOR NAME	KIND OF PAINT	POLYURETHANE	
		LABEL	AUTOCOLOR	
		INGREDIENTS	1L g{oz}	5L g{oz}
A3E	CLASSIC RED CLE	P425-941	461.9 {16.29}	2,309.5 {81.46}
		P429-976	558.5 {19.70}	2,792.5 {98.50}
		P425-900	562.6 {19.84}	2,813.0 {99.22}
		P425-921	678.6 {23.94}	3,393.0 {119.68}
		P192-474	1,017.4 {35.89}	5,087.0 {179.44}
A4D	ARCTIC WHITE CLE	P425-900	772.0 {27.23}	3,860.0 {136.16}
		P420-918RT	776.8 {27.40}	3,884.0 {137.00}
		P420-960RT	778.0 {27.44}	3,890.0 {137.21}
		P420-904RT	795.9 {28.07}	3,979.5 {140.37}
		P192-475	1,193.3 {42.09}	5,966.5 {210.46}
16W	BLACK MC	P425-0948	356.1 {12.56}	1,780.5 {62.80}
		P420-0902RT	388.6 {13.71}	1,943.0 {68.54}
		P425-0988	410.6 {14.48}	2,053.0 {72.42}
		P420-0920	424.0 {14.96}	2,120.0 {74.78}
		P425-0922	456.5 {16.10}	2,282.5 {80.51}
		P426-PP07	524.5 {18.50}	2,622.5 {92.50}
		P192-0500	957.2 {33.76}	4,786.0 {168.82}
18J	GRACE GREEN MC	P426-PP65	138.7 {4.89}	693.5 {24.46}
		P425-0948	263.7 {9.30}	1,318.5 {46.51}
		P420-0938	314.5 {11.09}	1,572.5 {55.47}
		P426-PP60	338.9 {11.95}	1,694.5 {59.77}
		P420-902RT	356.5 {12.57}	1,782.5 {62.87}
		P420-0982	398.5 {14.06}	1,992.5 {70.28}
		P425-0922	464.9 {16.40}	2,324.5 {81.99}
		P425-0954	594.8 {20.98}	2,974.0 {104.90}
		P192-0500	976.7 {34.45}	4,883.5 {172.26}
24E	SPAKING SILVER M	P425-984	396.5 {13.99}	1,982.5 {69.93}
		P420-938	419.0 {14.78}	2,095.0 {73.90}
		P420-942	429.7 {15.16}	2,148.5 {75.78}
		P420-982	451.2 {15.92}	2,256.0 {79.58}
		P425-989	634.8 {22.39}	3,174.0 {111.96}
		P192-528	976.7 {34.45}	4,883.5 {172.26}
25B	BLUE PACIFIC MC	P426-PP07	258.2 {9.11}	1,291.0 {45.54}
		P425-922	345.3 {12.18}	1,726.5 {60.90}
		P420-920	423.6 {14.94}	2,118.0 {74.71}
		P420-938	448.1 {15.81}	2,240.5 {79.03}
		P425-948	487.2 {17.19}	2,436.0 {85.93}
		P425-957	572.3 {20.19}	2,861.5 {100.93}
		P426-PP63	729.8 {25.74}	3,649.0 {128.71}
		P192-500	978.2 {34.50}	4,891.0 {172.52}
25C	CANARY YELLOW MC	Please contact the Nexa Autocolor office for the formula.		
25D	SNOWFLAKE WHITE PEARL MC	Please contact the Nexa Autocolor office for the formula.		

PRIMARY COLOR MIXTURE CHART FOR BODY COLORS

COLOR CODE	COLOR NAME		KIND OF PAINT	POLYURETHANE	
			LABEL	AUTOCOLOR	
			INGREDIENTS	1L g{oz}	5L g{oz}
25E	STRATO BLUE MC		P420-930	202.4 {7.14}	1,012.0 {35.70}
			P420-920	271.8 {9.59}	1,359.0 {47.94}
			P425-922	333.5 {11.76}	1,667.5 {58.82}
			P425-948	383.6 {13.53}	1,918.0 {67.65}
			P426-PP64	453.0 {15.98}	2,265.0 {79.89}
			P426-PP07	582.1 {20.53}	2,910.5 {102.66}
			P192-500	963.7 {33.99}	4,818.5 {169.96}
25F	GARNET RED MC		Please contact the Nexa Autocolor office for the formula.		
25G	TITANIUM GRAY M		P425-989	323.3 {11.40}	1,616.5 {57.02}
			P425-950	381.9 {13.47}	1,909.5 {67.35}
			P420-938	402.4 {14.19}	2,012.0 {70.97}
			P429-976	413.1 {14.57}	2,065.5 {72.86}
			P420-907	419.9 {14.81}	2,099.5 {74.06}
			P425-922	434.6 {15.33}	2,173.0 {76.65}
			P420-930	457.1 {16.12}	2,285.5 {80.62}
			P425-992	634.9 {22.40}	3,174.5 {111.98}
			P192-528	976.8 {34.46}	4,884.0 {172.28}
25H	SILVER CONTRAIL M		P425-992	477.0 {16.83}	2,385.0 {84.13}
			P425-989	526.8 {18.58}	2,634.0 {92.91}
			P420-960RT	535.6 {18.89}	2,678.0 {94.46}
			P425-957	539.5 {19.03}	2,697.5 {95.15}
			P425-948	545.4 {19.24}	2,727.0 {96.19}
			P420-938	565.9 {19.96}	2,829.5 {99.81}
			P420-918RT	634.2 {22.37}	3,171.0 {111.85}
			P192-528	975.6 {34.41}	4,878.0 {172.06}
27A	VELOCITY RED MC	GROUND COAT	P565-888	1,446.4 {51.02}	
			P425-948	1,555.3 {54.86}	
		BASE COAT	P425-941	285.9 {10.08}	
			P429-976	441.8 {15.58}	
			P426-PP09	559.9 {19.75}	
			P426-PP08	773.4 {27.28}	
			P192-500	992.8 {35.02}	
27C	NORDIC GREEN MC	GROUND COAT	P425-948	426.5 {15.04}	
			P425-900	711.2 {25.09}	
			P192-475	1,066.2 {37.61}	
		BASE COAT	P426-PP05	297.3 {10.49}	
			P425-922	362.6 {12.79}	
			P426-PP07	378.2 {13.34}	
			P420-920	392.8 {13.86}	
			P425-957	428.8 {15.13}	
			P425-950	652.0 {23.00}	
			P192-500	974.7 {34.38}	
29Y	TITANIUM GRAY II M		P425-992	324.2 {11.44}	
			P425-948	445.3 {15.71}	
			P420-938	473.6 {16.71}	
			P429-976	490.2 {17.29}	
			P420-930	563.5 {19.88}	
			P425-987	765.6 {27.01}	
			P192-5600	976.5 {34.44}	

PPG INDUSTRIES

- Please confirm the newest formula at the following URL.
  http://www.ppg.com/gridppg/

COLOR CODE	COLOR NAME	KIND OF PAINT	POLYURETHANE	
		LABEL	DELTRON	
		INGREDIENTS	1L g{oz}	NOTE
A3E	CLASSIC RED CLE	752	670.0 {23.63}	
		746	875.0 {30.86}	
		791	953.0 {33.62}	
		756	957.9 {33.79}	
A4D	ARCTIC WHITE CLE	753	1,237.9 {43.66}	
		745	1,239.0 {43.70}	
		742	1,239.4 {43.71}	
		740	1,239.6 {43.72}	
16W	BLACK MC	740	672.0 {23.70}	
		763	864.0 {30.48}	
		952	901.1 {31.78}	
		953	936.1 {33.02}	
		752	950.1 {33.51}	
		753	952.9 {33.61}	
18J	GRACE GREEM MC	957	336.0 {11.85}	
		797	599.0 {21.13}	
		740	799.0 {28.18}	
		754	948.0 {33.44}	
		759	959.2 {33.83}	
		753	962.0 {33.93}	
24E	SPARKLING SILVER M	952	917.0 {32.35}	
		743	947.6 {33.43}	
		745	958.3 {33.80}	
		779	960.9 {33.89}	
		740	961.9 {33.93}	
25B	BLUE PACIFIC MC	776	534.0 {18.84}	
		763	813.0 {28.68}	
		755	890.0 {31.39}	
		958	919.6 {32.44}	
		770	943.3 {33.27}	
		740	964.1 {34.01}	
25C	CANARY YELLOW MC	Please contact the PPG office for the formula.		
25D	SNOWFLAKE WHITE PEARL MC	Please contact the PPG office for the formula.		
25E	STRATO BLUE MC	958	336.0 {11.85}	
		776	653.0 {23.03}	
		763	768.0 {27.09}	
		740	869.0 {30.65}	
		755	965.0 {34.04}	
25F	GARNET RED MC	Please contact the PPG office for the formula.		
25G	TITANIUM GRAY M	952	682.0 {24.06}	
		756	911.0 {32.13}	
		741	928.6 {32.75}	
		755	939.3 {33.13}	
		955	950.0 {33.51}	
		799	958.0 {33.79}	

PRIMARY COLOR MIXTURE CHART FOR BODY COLORS

COLOR CODE	COLOR NAME	KIND OF PAINT	POLYURETHANE	
		LABEL	DELTRON	
		INGREDIENTS	1L g{oz}	NOTE
25H	SILVER CONTRAIL M	952	936.0 {33.02}	
		759	943.5 {33.28}	
		740	949.5 {33.49}	
		797	953.5 {33.63}	
		963	956.7 {33.75}	
		743	959.2 {33.83}	
		753	960.2 {33.87}	
27A	VELOCITY RED MC COLOR BASE	752	598.1 {21.10}	
		799	888.1 {31.33}	
		792	951.5 {33.56}	
	VELOCITY RED MC PEARL BASE	748	34.9 {1.23}	
		PRLX1	41.2 {1.45}	
		895	928.3 {32.74}	
27C	NORDIC GREEN MC	740	441.9 {15.59}	
		754	818.6 {28.87}	
		741	905.5 {31.94}	
		PRLX2	967.1 {34.11}	
		757	992.5 {35.01}	
29Y	TITANIUM GRAY II M	768	540.0 {19.05}	
		952	785.8 {27.72}	
		740	873.1 {30.80}	
		774	905.4 {31.94}	
		776	928.0 {32.73}	
		742	944.2 {33.31}	

DIAMONT

- Please confirm the newest formula at the following URL.
  http://www.rmpaint.net/

COLOR CODE	COLOR NAME	KIND OF PAINT / LABEL / INGREDIENTS		POLYURETHANE	
				DIAMONT BASE g{oz}	SOLO DE DIAMONT BASE g{oz}
A3E	CLASSIC RED CLE	BC 020	REDUCER(THINNER)	88.0 {3.10}	
		BC 832	RED 2	618.7 {21.82}	
		BC 816	ORGANIC BRIGHT RED	915.4 {32.29}	
		BC 250	CARBON BLACK 2	923.8 {32.59}	
A4D	ARCTIC WHITE CLE	BC 020	REDUCER(THINNER)	88.0 {3.10}	
		BC 190	WHITE	962.4 {33.95}	
		BC 209	BLACK TINT	1,030.3 {36.34}	
		BC 609	YELLOW TINT	1,078.9 {38.06}	
		BC 809	RED TINT	1,093.6 {38.57}	
16W	BLACK MC	BC 020	REDUCER(THINNER)	88.0 {3.10}	
		BC 200	CARBON BLACK	667.8 {23.56}	
		BC 406	PHTALO BLUE 3	742.7 {26.20}	
		BC 470	INDO BLUE	809.1 {28.54}	
		BC 118	BLUE PEARL	842.1 {29.70}	
		BC 171	MEDIUM ROUND ALUMINUM	867.4 {30.60}	
		BC 805	IRON RED	876.9 {30.93}	
		BC 101	FLOP CONTROL	916.8 {32.34}	
18J	GRACE GREEN MC	BC 020	REDUCER(THINNER)	88.0 {3.10}	
		BC 500	PHTALO GREEN 1	393.4 {13.88}	
		BC 200	CARBON BLACK 1	653.5 {23.05}	
		BC 1255	GREEN PEARL	781.8 {27.58}	
		BC 406	PHTALO PEARL 3	882.3 {31.12}	
		BC 105	WHITE TINT	895.3 {31.58}	
		BC 101	FLOP CONTROL	926.7 {32.69}	
24E	SPARKLING SILVER M	BC 020	REDUCER(THINNER)	88.0 {3.10}	
		BC 171	MEDIUM ROUND ALUMINUM	735.1 {25.93}	
		BC 600	INORGANIC YELLOW 1	839.5 {29.61}	
		BC 180	COARSE ALUMINUM	882.9 {31.14}	
		BC 200	CARBON BLACK 1	918.5 {32.40}	
		BC 805	IRON RED 2	929.9 {32.80}	
25B	BLUE PACIFIC MC	BC 020	REDUCER(THINNER)	88.0 {3.10}	
		BC 406	PHTALO PEARL 3	382.5 {13.49}	
		BC 118	BLUE PEARL	587.2 {20.71}	
		BC 400	PHTALO BLUE 1	789.5 {27.85}	
		BC 300	VIOLET	869.4 {30.67}	
		BC 200	CARBON BLACK 1	894.9 {31.57}	
		BC 140	MEDIUM FINE ALUMINUM	916.1 {32.31}	
		BC 171	MEDIUM ROUND ALUMINUM	926.4 {32.68}	

PRIMARY COLOR MIXTURE CHART FOR BODY COLORS

COLOR CODE	COLOR NAME	KIND OF PAINT / LABEL / INGREDIENTS		POLYURETHANE DIAMONT BASE g{oz}	POLYURETHANE SOLO DE DIAMONT BASE g{oz}
25C	CANARY YELLOW MC	GROUND COAT			
		BC 020	REDUCER(THINNER)	88.0 {3.10}	
		BC 621	ORGANIC YELLOW 2	500.1 {17.64}	
		BC 190	WHITE	857.0 {30.23}	
		BC 615	ORGANIC YELLOW 3	983.4 {34.69}	
		BC 805	IRON RED 2	1,016.7 {35.86}	
		BC 250	LAMP BLACK	1,026.0 {36.19}	
		COLOR BASE			
		BC 020	REDUCER(THINNER)	88.0 {3.10}	
		BC 1190	SHINY WHITE PEARL	446.4 {15.75}	
		BC 1265	GOLD PEARL 2	605.8 {21.37}	
		BC 605	INORGANIC YELLOW 2	754.3 {26.61}	
		BC 621	ORGANIC YELLOW 2	793.9 {28.00}	
		BC 615	ORGANIC YELLOW 3	809.4 {28.55}	
		BC 190	WHITE	823.3 {29.04}	
		BC 101	FLOP CONTROL	965.0 {34.04}	
25D	SNOWFLAKE WHITE PEARL MC	GROUND COAT			
		BC 020	REDUCER(THINNER)	87.1 {3.07}	
		BC 190	WHITE	974.6 {34.38}	
		BC 209	BLACK TINT	1,038.2 {36.62}	
		BC 609	YELLOW TINT	1,072.8 {37.84}	
		BC 809	RED TINT	1,093.0 {38.55}	
		BC 409	BLUE TINT	1,096.3 {38.67}	
		PEARL BASE			
		BC 020	REDUCER(THINNER)	88.1 {3.11}	
		BC 100	MIXING CLEAR	752.3 {26.54}	
		BC 1190	SHINY WHITE PEARL	842.7 {29.72}	
		BC 1265	GOLD PEARL 2	859.0 {30.30}	
		BC 101	FLOP CONTROL	908.1 {32.03}	
25E	STRATO BLUE MC	BC 020	REDUCER(THINNER)	88.0 {3.10}	
		BC 200	CARBON BLACK 1	290.4 {10.24}	
		BC 100	MIXING CLEAR	479.2 {16.90}	
		BC 400	PHTALO BLUE 1	646.4 {22.80}	
		BC 406	PHTALO PEARL 3	725.3 {25.58}	
		BC 118	BLUE PEARL	794.2 {28.01}	
		BC 300	VIOLET	860.3 {30.35}	
		CB 34M	CRYSTAL VIOLET	923.2 {32.56}	
		BC 111	WHITE PEARL	931.3 {32.85}	
25F	GARNET RED MC	BC 020	REDUCER(THINNER)	88.0 {3.10}	
		BC 820	MAROON 1	397.1 {14.01}	
		BC 840	MAGENTA	655.8 {23.13}	
		BC 1815	SHINY RED PEARL	758.7 {26.76}	
		BC 201	CARBON BLACK3	777.0 {27.41}	
		BC 250	LAMP BLACK	787.0 {27.76}	
		BC 1265	GOLD PEARL 2	792.5 {27.95}	
		BC 101	FLOP CONTROL	926.3 {32.67}	

PRIMARY COLOR MIXTURE CHART FOR BODY COLORS

COLOR CODE	COLOR NAME		KIND OF PAINT	POLYURETHANE	
			LABEL	DIAMONT BASE g{oz}	SOLO DE DIAMONT BASE g{oz}
			INGREDIENTS		
25G	TITANIUM GRAY M	BC 020	REDUCER(THINNER)	88.0 {3.10}	
		BC 175	MEDIURM SHINY ALUMIUIUM	639.4 {22.55}	
		BC 200	CARBON BLACK 1	739.5 {26.08}	
		BC 115	RUSSET PEARL	822.8 {29.02}	
		BC 180	COARSE ALUMINUM	866.8 {30.57}	
		BC 410	PHTALO BLUE 2	892.1 {31.47}	
		BC 300	VIOLET	915.0 {32.28}	
		BC 250	LAMP BLACK	926.7 {32.69}	
		BC 101	FLOP CONTROL	936.0 {33.02}	
25H	SILVER CONTRAIL M	BC 020	REDUCER(THINNER)	88.0 {3.10}	
		BC 171	MEDIUM ROUND ALUMINUM	787.3 {27.77}	
		BC 170	MEDIUM ALUMINIUM	854.7 {30.15}	
		BC 200	CARBON BLACK 1	883.9 {31.18}	
		BC 510	PHTALO GREEN 2	893.4 {31.51}	
		BC 406	PHTALO PEARL 3	902.6 {31.84}	
		BC 101	FLOP CONTROL	928.3 {32.74}	
27A	VELOCITY RED MC	Please contact the DIAMONT office for the formula.			
27C	NORDIC GREEN MC	BC 020	REDUCER(THINNER)	87.3 {3.08}	
		BC 406	PHTALO PEARL 3	223.4 {7.88}	
		BC 1190	SHINY WHITE PEARL	513.0 {18.10}	
		BC 201	CARBON BLACK3	921.8 {32.51}	
		BC 101	FLOP CONTROL	938.7 {33.11}	
29Y	TITANIUM GRAY II M	BC 020	REDUCER(THINNER)	88.0 {3.10}	
		BC 171	MEDIUM ROUND ALUMINIUM	512.5 {18.08}	
		BC 201	CARBON BLACK3	628.5 {22.17}	
		BC 250	LAMP BLACK	737.8 {26.02}	
		BC 470	INDO BLUE	805.9 {28.43}	
		BC 175	MEDIURM SHINY ALUMINIUM	847.9 {29.91}	
		BC 881	RED VIOLET	869.7 {30.68}	
		BC 101	FLOP CONTROL	928.6 {32.75}	

PRIMARY COLOR MIXTURE CHART FOR BODY COLORS

GLASURIT

- Please confirm the newest formula at the following URL.
  http://www.glasurit.com/

COLOR CODE	COLOR NAME	KIND OF PAINT	POLYURETHANE	
		LABEL	GLASSOMAX BASE COAT	GLASSODUR PUR TOP COAT 21-
		INGREDIENTS	g{oz}	g{oz}
A3E	CLASSIC RED CLE	352-91	173.8 {6.13}	
		A 352	646.0 {22.79}	
		A 324	910.8 {32.13}	
		A 974	918.2 {32.39}	
A4D	ARCTIC WHITE CLE	352-91	173.8 {6.13}	
		M 25	950.9 {33.54}	
		A 927	1,011.3 {35.67}	
		A 137	1,054.5 {37.20}	
		A 307	1,067.6 {37.66}	
16W	BLACK MC	M99/19	30.0 {1.06}	
		69-M505	70.0 {2.47}	
		A 098	80.0 {2.82}	
		A 531	135.0 {4.76}	
		A 555	215.0 {7.58}	
		A 926	988.0 {34.85}	
		A 105	1,000.0 {35.27}	
18J	GRACE GREEN MC	35291	174.2 {6.14}	
		M 600	288.3 {10.17}	
		A 640	561.0 {19.79}	
		A 926	791.8 {27.93}	
		A 555	880.7 {31.07}	
		A 125	891.8 {31.46}	
		M 1	919.4 {32.43}	
24E	SPARKLING SILVER M	352-91	173.8 {6.13}	
		M 99/19	748.9 {26.42}	
		M 99/20	787.5 {27.78}	
		A 136	880.4 {31.05}	
		A 926	912.0 {32.17}	
		M 306	922.1 {32.53}	
25B	BLUE PACIFIC MC	352-91	173.8 {6.13}	
		M 505	355.8 {12.55}	
		M 99/10	374.6 {13.21}	
		M 99/19	383.8 {13.54}	
		A 555	645.4 {22.77}	
		A 552	825.3 {29.11}	
		A 427	896.3 {31.62}	
		A 926	919.0 {32.42}	

PRIMARY COLOR MIXTURE CHART FOR BODY COLORS

COLOR CODE	COLOR NAME	KIND OF PAINT	POLYURETHANE	
		LABEL	GLASSOMAX BASE COAT	GLASSODUR PUR TOP COAT 21-
		INGREDIENTS	g{oz}	g{oz}
25C	CANARY YELLOW MC	GROUND COAT		
		352-91	173.8 {6.13}	
		A 143	540.1 {19.05}	
		M 25	857.1 {30.23}	
		M 146	969.4 {34.19}	
		M 306	999.0 {35.24}	
		A 974	1,007.2 {35.53}	
		COLOR BASE		
		352-91	173.8 {6.13}	
		M 919	492.6 {17.38}	
		M 179	634.2 {22.37}	
		M 105	766.2 {27.03}	
		A 143	801.7 {28.28}	
		M 146	815.0 {28.75}	
		M 25	827.3 {29.18}	
		M 1	953.2 {33.62}	
25D	SNOWFLAKE WHITE PEARL MC	GROUND COAT		
		352-91	173.8 {6.13}	
		M 25	962.0 {33.93}	
		A 927	1,018.4 {35.92}	
		A 137	1,049.0 {37.00}	
		A 307	1,067.0 {37.64}	
		A 553	1,069.9 {37.74}	
		PEARL BASE		
		352-91	173.8 {6.13}	
		M 919	254.1 {8.96}	
		M 179	268.6 {9.47}	
		M 0	859.2 {30.31}	
		M 1	902.7 {31.84}	
25E	STRATO BLUE MC	352-91	173.8 {6.13}	
		M 505	235.0 {8.29}	
		E 440	290.9 {10.26}	
		M 010	298.0 {10.51}	
		A 926	478.2 {16.87}	
		M 0	646.0 {22.79}	
		A 552	794.7 {28.03}	
		A 555	864.8 {30.50}	
		A 427	923.5 {32.57}	
25F	GARNET RED MC	352-91	173.8 {6.13}	
		M 179	178.7 {6.30}	
		A 347	453.5 {16.00}	
		A 353	683.5 {24.11}	
		M 319	774.9 {27.33}	
		A 929	791.1 {27.90}	
		A 974	800.0 {28.22}	
		M 1	918.9 {32.41}	

PRIMARY COLOR MIXTURE CHART FOR BODY COLORS

COLOR CODE	COLOR NAME	KIND OF PAINT	POLYURETHANE	
		LABEL	GLASSOMAX BASE COAT	GLASSODUR PUR TOP COAT 21-
		INGREDIENTS	g{oz}	g{oz}
25G	TITANIUM GRAY M	352-91	173.8 {6.13}	
		M 99/22	663.8 {23.41}	
		M 800	737.9 {26.03}	
		M 99/20	777.0 {27.41}	
		A 926	866.0 {30.55}	
		A 548	888.4 {31.34}	
		A 427	908.8 {32.06}	
		A 974	919.2 {32.42}	
		M 1	927.5 {32.72}	
25H	SILVER CONTTAIL M	352-91	173.8 {6.13}	
		M 99/19	795.4 {28.06}	
		M 99/12	855.3 {30.17}	
		A 926	881.3 {31.09}	
		A 696	889.8 {31.39}	
		A 555	898.0 {31.68}	
		M 1	920.8 {32.48}	
27A	VELOCITY RED MC	Please contact the GLASURIT office for the formula.		
27C	NORDIC GREEN MC	352-91	174.4 {6.15}	
		M 919	432.5 {15.26}	
		A 929	796.9 {28.11}	
		A 555	918.2 {32.39}	
		M 1	933.2 {32.92}	
29Y	TITANIUM GRAY II M	352-91	173.8 {6.13}	
		M 99/19	551.0 {19.44}	
		M 99/22	588.3 {20.75}	
		A 929	691.3 {24.38}	
		A 974	788.4 {27.81}	
		A 531	848.9 {29.94}	
		A 430	868.3 {30.63}	
		M 1	920.6 {32.47}	